ESC USER MANUAL

The Specification of Electric Speed Controller for Brushless Motor

Dear customers:

Thank you for using the HobbyKing electric speed controller (ESC) for brushless motor designed. Wrong use and operation may cause personal injuries and damages on the equipment due to the strong power at the starting of the product. We strongly recommend customers to read the specification carefully before using the product and operate the product strictly in accordance with the operating provisions. We assume no responsibilities generated from the application of the product, including but not limited to liabilities for damage of incidental losses or indirect losses. Meanwhile, we assume no responsibilities generated from the disassembly and modification by users themselves and assume no responsibilities caused by products from the third party.

We have the right to alter products including appearance, performance parameter and operating requirement without advanced notice. We make no guarantee, declaration or promise on whether the product is suitable for specific purpose of users.

1.The main properties of electric speed ccontroller for brushless motor

- Use powerful and high-performance MCU processor. The users can set function of use according to their requirements. It fully reflects the smart property of our products as a unique advantage.
- Support unlimited rotate speed of brushless motor
- Support the function of fixed speed
- Delicate circuit design with strong anti-interference
- The starting mode can be set. The response speed of throttle is very quickly and with very stable linear of speed regulation. It can be used in fixed wing aircraft and helicopter
- Threshold values of low-voltage protection can be set.
- With internal SBEC, the operating power to start steering engine is strong and the power dissipation is small.
- Multi protection function: protection for abnormal input voltage/ protection for low battery/ protection for overheat/protection of lowing power when lost of signals from throttle
- Good safety performance under energization: the motor will not start at the time of power on regardless of the location of pull rod of throttle in controller.
- Protection for overheat: the output power will lesson to half when the temperature reaches 100℃ during the operation of ESC. The output power will automatic recover when the temperature is under 100℃
- Supports with operation setting for all controller and setting of programming panels
- Set alarm sound. And judge the working situation after power on.
- The company has completed intellectual property on the product. The product can be continuingly updated and upgraded. The product can be made to customers' requirements.

The product standard of ESC

Standard	(A) sustained current	(10s) (A) max instantaneous current	(V/A) Output BEC	BEC mode	Number of battery/lithium battery	Number of battery/nickel-hydrogen battery	mm Size(width*length*height)	g weight
HK-10A	10A	12A	5V/1A	UBEC	2-3Lipo	5-9NC	21*35*7	12
HK -20A	20A	25A	5V/3A	UBEC	2-4Lipo	5-12NC	25*54*11	28
HK -30A	30A	40A	5V/3A	UBEC	2-4Lipo	5-12NC	25*54*11	28
HK -40A	40A	60A	5 V/3A	SBEC	2-4Lipo	5-12NC	25*70*12	48
HK -40A	40A	60A	5.5V/4A	SBEC	2-6Lipo	5-18NC	30*45*17	37
HK -50A	50A	80A	5.5V/4A	SBEC	2-4Lipo	5-12NC	35*71*17	68
HK -50A	50A	80A	5.5V/4A	SBEC	2-6Lipo	5-18NC	35*71*17	68
HK -60A	60A	80A	5.5V/4A	SBEC	2-4Lipo	5-12NC	32*70*17	70
HK -60A	60A	80A	5.5V/4A	SBEC	2-6Lipo	5-18NC	35*71*17	70
HK -70A	70A	100A	5.5V/4A	SBEC	2-6Lipo	5-18NC	32*70*17	74
HK -80A	80A	100A	5.5V/4A	SBEC	2-6Lipo	5-18NC	32*67*23	90
HK -90A	90A	120A	5.5V/4A	SBEC	2-6Lipo	5-18NC	35*66*22	95
HK -100A	100A	140A	5.5V/4A	SBEC	2-6Lipo	5-18NC	35*71*22	95
HK -100A OPTO	100A	140A	none	none	2-6Lipo	5-18NC	35*71*22	87
HK -110A	110A	150A	5.5V/4A	SBEC	2-6Lipo	5-18NC	35*71*22	95
HK -110A OPTO	110A	150A	none	none	2-6Lipo	5-18NC	35*71*22	87
HK -120A	120A	150A	5.5V/4A	SBEC	2-6Lipo	5-18NC	35*71*22	98
HK -120A OPTO	120A	150A	none	none	2-6Lipo	5-18NC	35*71*22	90

Notice:

1） The ESC with SBEC supply steering engine with switching power. The output voltage is 5.5V. The load current of steering engine is 4A. At the moment of 2 seconds can reach 8A.

2） The ESC with UBEC supply steering engine with linear power. The output voltage is 5.5v. The load current is 1A.

3） OPTO means that there is no BEC inside ESC. The steering engine and receiver shall be supplied with power separately.

4） Customized BEC can be made according to customers' requirements.

5） Customized ESC can be made according to customers' requirements.

II. The introduction of the connection in the ESC

In order to avoid short circuit and leakage, the joint are connected by thermal shrinkable pipe to ensure insulation.

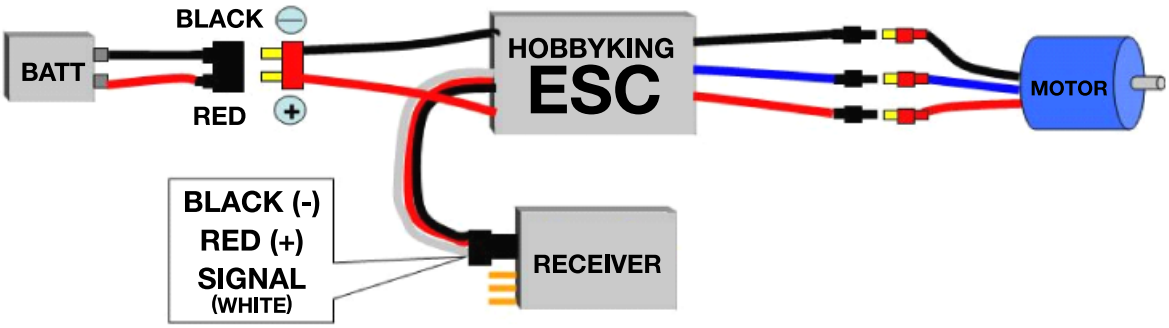

Battery Pack Black Red White Motor

III. The function of electric speed controller for brushless motor

1. Reset to factory default
2. Battery types set(Lipo or NiMh/NiCd)
3. Brake set (yes/no)
4. Threshold set of protection for low voltage (set a protective value for low voltage)
5. Motor entrance angle set (improve the service efficiency of ESC and the stability in the starting)
6. Accelerated startup set (used in precise gear box and application of helicopter)
7. Helicopter mode (used in application of helicopter)
8. Steering motor (clockwise/anticlockwise)
9. Operating frequency set
10. Protection mode under low voltage (reduces power or halts immediately)

VI. The operation steps of programming in ESC for brushless motor.

Push the pull rod of throttle in the ESC to the highest position to make the ESC enter the setting mode and then turn on the ESC.

Remark: the ESC enters the setting mode when the pull rod of throttle in the ESC is pushed to the highest position; the ESC enters the working mode when the pull rod of throttle in the ESC is pushed to the lowest position.

1) Connect the battery pack to the ESC. After two seconds, a beep shows that the ESC enters the setting mode. The menu of setting mode is a cycle model. Each function corresponds to one corresponding musical tone. Each musical tone will ring out for four times continuously. During the four periods when music rings, push the pull rod of throttle in the ESC to the lowest position. Then the motor will give out a beep to inform that corresponding parameters have been stored, and the ESC enters the working mode.

2) Repeat the above operation to set various functions you need.

Remark: Can also set with programming panels（optional accessories）. Refer to specification of programming panels for setting method.

1. Brake: turn on/turn off

Turn on: the propeller stops immediately when the throttle works under the smallest position.

Turn off: the propeller stops naturally when the throttle works under the smallest position.

2. Battery types: LiPo or NiCd/NiMh

NiCd/NiMh- set protection point for NiCad/NiMh.

Lipo-set protection point for Lipo and detect numbers of battery automatically in the battery pack.

Remark: the choice of NiCad/NiMh battery will make the ESC automatically set the cutoff value of voltage at 65% of factory defaults. The cutoff value can be modified through the function of protection for low voltage in case of changes. Once the battery pack of NiCad/NiMh connects to the power, the ESC will read its initial voltage. The voltage will used as a reference value for cutoff value of voltage.

3. Protection function of low voltage: low/middle/high

1) In case of Ni-xx battery pack: the cutoff value of voltage is 50%/65%/65% of the initial voltage of battery pack under low/middle/high threshold value.

2) In case of Li-xx battery pack: the number of batteries can be calculated automatically. Users need not to set anything except the types of battery. The ESC provides three optional gears for protection point of low voltage: low(2.8V)/middle(3.0V)/high(3.2V)

For example: the protection cutoff voltage for low voltage is 11.2V as low /12.0V as middle/12.8V as high in case of Li-po battery pack with four batteries and voltage at 14.8V.

4. Recover to factory default setting.

1) The factory default setting of ESC:

2) The brake: off

3) The types of battery: Lipo battery with automatic detection.

4) The cutoff value under low voltage: middle (3.0V/65%)

5) The angle of entrance in motor: automatic

6) Setting for accelerated startup: smooth

7) The setting Mode for helicopter: off

8) The frequency of working: 8kHz

9) Protection mode under low voltage: reduce power

5. The angle of entrance in motor: automatic/low/high

Automatic-the ESC detect the most suitable angle of entrance in motor automatically.

Low (7-22 degree) – suitable for the setting of most motors with inner rotor

High (22-30 degree)-suitable for the setting of most motors with outer rotor and 6 poles or more than poles

Under most cases, the automatic angle of entrance is suitable for all motors. However, in order to increase efficiency, we recommend using low angle of entrance in motors with 2 poles (generally inner rotor), and using high angle of entrance in motors with 6 and more than 6 poles (generally outer rotor). We can set a high angle of entrance for motors with higher rotate speed. Some motors need special angle of entrance. We recommend using the angle of entrance recommended by motor producers or automatic detected angle of entrance in case of uncertainty.

Remark: please debug the motor on the ground after successfully altering the angle of entrance in motor.

Setting for accelerated startup: provide rapid accelerated start up with linear throttle response.

Ultra smooth startup: the lag time of throttle response between the starting and highest speed is 1.5 seconds. The setting mode can prevent the precision gear/gearing dropping under momentary load. The setting mode is recommended to use in fixed wing model with gear box or helicopter.

Smooth startup: the lag time of throttle response between the starting and highest speed is 1 second. The setting mode is recommended to use in fixed wing model with gear box or helicopter.

Accelerated startup: there is no lag time of throttle response between the starting and highest speed. The setting mode is recommended to use in fixed wing model with direct drive.

6. The Mode for helicopter: (use in application of helicopter)

Turn off the helicopter

Helicopter 1: the lag time of throttle response between the starting and highest speed is 5 seconds. However, if the throttle is turned off after startup, the next startup will commence in common mode.

Helicopter 1: the lag time of throttle response between the starting and highest speed is 15 seconds. However, if the throttle is turned off after startup, the next startup will commence in common mode.

Remark: once working under mode for helicopter, the brake and types of protection under low voltage will be reset automatically to mode of no brake and reduce power mode separately regardless of previous setting of ESC.

7. Steering motor (clockwise/anticlockwise)

In most cases, the clockwise and anticlockwise rotation of motor can be realized by exchanging any two lines among the three output lines in the ESC connected to the motor. The direction of rotation can be changed by altering the setting value on the ESC in case that the wire connected to motor has been directly welded on the ESC.

8. Operating frequency： 8kHz / 16kHz

8 kHz-the Operating frequency for motor with 2 poles, for example inner rotor

16 kHz-the Operating frequency for motor with poles more than 2, for example outer rotor

Although the operating frequency of 16 kHz can provide strong power for fixed wing or helicopter, the default setting is 8 kHz for there are louder RF noise under the operating frequency of 16 kHz.

9. Protection mode under low voltage: reduce power/ halt immediately

Reduce power- the ESC will reduce the output power of motor when reaches default protection threshold for low voltage (recommend)

Halt immediately-the ESC will cut off the output power of motor when reaches default protection threshold for low voltage

V. The order and introduction of circle menu under programming mode

● Turn on ESC- push the throttle to the highest position-connect the ESC to battery- wait two second-enter programming mode

After enter programming mode, the following beeps will give out in accordance with the following circuit. After certain warning tone, push the throttle to the lowest position during the four beeps.

Confirm and reserve the setting.

The introduction for the setting of programming

The setting of programming :(the five following warning tone is as follows.)			
A= - beep-	short sound		
B= beep-beep-beep	3 three continuing sounds		
C=～beep	gradual changing sound+beep		
D= beep↘	low sound		
E= beep--	long sound		
music1	throttle		A-A-A-A
music2	brake		B-B-B-B
music3	types of battery	**nickel-hydrogen battery**	C-C-C-C
music4		**lithium battery**	D-D-D-D
music5	protection threshold for low voltage	low	E-E-E-E
music6		middle	AA-AA-AA-AA
music7		high	BB-BB-BB-BB
music8	Recover to factory default setting		CC-CC-CC-CC
music9	Angle of entrance	Automatic	DD-DD-DD-DD
music10		Low	EE-EE-EE-EE
music11		High	AAA-AAA-AAA-AAA
music12	Startup of motor	Ultra smooth	BBB-BBB-BBB-BBB
music13		Smooth	CCC-CCC-CCC-CCC
music14		Accelerated startup	DDD-DDD-DDD-DDD
music15	Mode for helicopter	Turn off	EEE-EEE-EEE-EEE
music16		The helicopter mode 1	AAAA-AAAA-AAAA-AAAA
music17		The helicopter mode 2	BBBB-BBBB-BBBB-BBBB
music18	The pros and cons setting of motor rotation		CCCC-CCCC-CCCC-CCCC
music19	PWM frequency of motor	8K	DDDD-DDDD-DDDD-DDDD
music20		16K	EEEE-EEEE-EEEE-EEEE
music21	Protection mode under low voltage	Reduce power	AD-AD-AD-AD
music22		cutoff output	AE-AE-AE-AE

● The warning tone: the warning tone is set as audible sound to help users judge abnormal condition after turn on the power.

1. Fail to enter working mode after turn on the power: the routine of throttle has not been set yet.
2. Continuing beeps: the pull rod of throttle is not in the lowest position
3. There is a short pause after a beep: the ESC can not detect normal throttle signals from receiver.
4. There is a pause of one second after a beep: the voltage of battery pack is out of acceptable limit (once the battery is connected, the ESC will carry out a self-checking and check the voltage of battery.)

VI. The smart protection functions of ESC.

The introduction of the protection function in the ESC for brushless motor	
Types of	Descriptions of protection

protection	
Protection for startup	If the motor fails to startup normally in two seconds after push the throttle to start, the ESC will cut off the motor. The throttle shall be reset to commence a restart. Possible reasons: there is a disconnection or poor contact in wiring between the ESC and motor. The propeller is stemmed by other objects. The speed reduction gear is badly blocked.
Protection for temperature	When the working temperature in the ESC is higher than 100℃, the ESC will reduce the output power automatically to commence protection, but will reduce the output power to 40% of full power to reserve some power for motor and avoid crash landing instead of turning off all output power. The ESC will recover to max power as the temperature falls.
Protection for lost of throttle signals	The ESC will reduce the output power to motor when the ESC detect that there are 2 seconds' lost of throttle signals. If there another 2 seconds' lost of throttle signals, the ESC will cut off motor automatically. If the throttle signals recover during the reduction of output power of motor, the ESC will recover control of throttle at once. In this method, in the case of momentary lost of signals (within 2 seconds), the ESC will not commence the protection of throttle. Only when the control signals have been lost for a long time, the ESC will commence protection. However, the ECS will reduce the output power gradually instead of cutting off output power immediately so that the players will have certain period to rescue the machine. It has both safety and practicability.

VII. The routine of throttle shall be set at the first time turn on the ESC.

The feature of HobbyKing ESC is to set best routine of throttle according to different transmitters. The ESC can obtain most stable throttle linear response through the total routine of throttle in transmitters. The objective is let the ESC to obtain and remember the output signals of throttle in transmitters. The operation needs to be carried for one time. Please repeat the operation when change transmitters.

Notice: must to check carefully whether polarities of all connector assembly are correct and whether the installation is firm before connect the battery pack during the using to avoid damages to the ESC due to incorrect connection between polarities or short cut.

The operation when use the ESC for the first time is as follows:

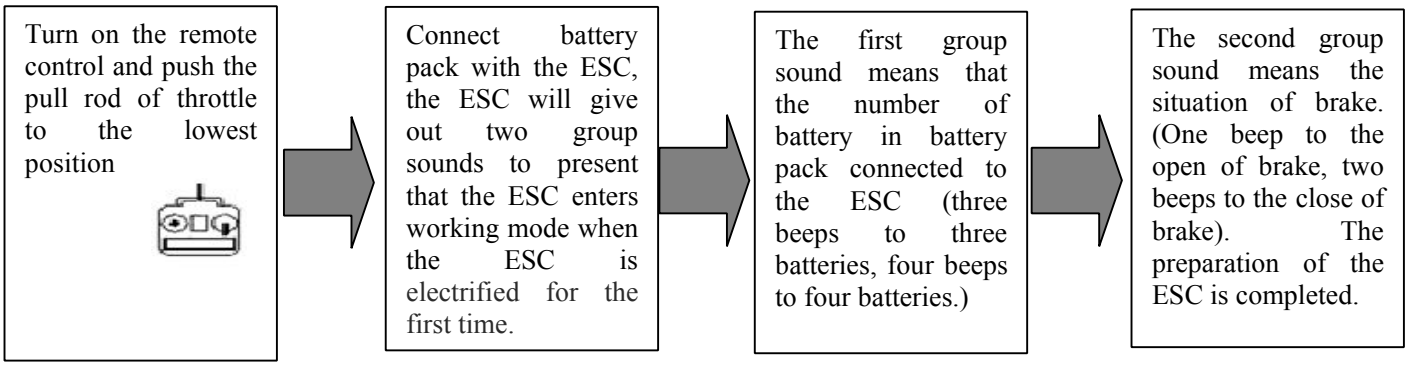

Remark: if the motor suddenly stops when your model airplane are flying, you shall immediately push the pull rod of throttle to the lowest position and then push to the high position. Then the motor will restart. You

shall land the model airplane immediately with throttle controlled with a lower position.

Please pay attention to the following safety information when using.

- Never disassemble any electro components in the ESC by yourself, or permanent damages or lost of information will occur.
- Check the setting of receiver. Do not install propeller or small driving gear on motor if you haven't confirm that the setting of receiver is correct when test the ESC and motor for the first time.
- Do not use cracked or broken battery pack.
- Do not use battery pack easily get overheat.
- Do not use short-cut battery.
- Do not use cable insulation material against standards.
- Do not use cable connector against standards.
- The number of battery or servo system shall not exceed the rules for ESC.
- The voltage of battery shall not exceed the scope of working voltage of ESC.
- Pay attention to the polarities of battery. Wrong polarities will damage the ESC.
- Be sure that the ESC will not use in manned craft or other manned machines.
- Do not place the ESC in moist or over exposure.
- Do not take out battery when the motor is working, for the generated large peak current will damage the ESC.
- Do not pack anything outside the ESC. Install the ESC in places with good ventilation and heat dissipation as far as possible.

VIII. Handling of common problems

Problems	Possible reasons	Solutions
After power on, the motor fails to work and there is no music. The servo system fails to work and switch on.	There is a poor contact between battery pack and ESC. The power is off.	Clean the plugs again or change plugs. Check and confirm the polarities of wiring.
	The polarities of connection between receiver and signal wires of ESC are wrong	Check the signal wire to ensure the polarities are correct.
	The welding is not firm so a poor contact easy happens.	Weld the connecting line for the second time.
	The wiring polarities of batteries are wrong.	Check the battery pack and exchange battery pack with full voltage in accordance with standards.
	Other quality problems in ESC	Change ESC
After power on, there is sound that ESC automatically check the number of batteries, but the motor fails to work.	The ESC fails to set routine of throttle.	Reset the routine of throttle.
The ESC work successfully, but motor fails to work. There is no music. After power on of ESC ,motor fails to work and gives out warning tone(two bees and short pause)	There is a poor contact or welding between ESC and motor.	Check the end of connector or change connector or weld the wiring of motor again.
	Bad motor	Change motor
	Protection for low voltage in ESC. The voltage of battery is out of acceptable limit.	Check the voltage of battery group, change with battery group of full voltage.
After power on, motor fails to work but gives out warning tone(one beep and short pause	There is no output signal of throttle in receiver.	Check and confirm the connection between signal wire and throttle in receiver is correct. Check the transmitters and receivers to ensure that there are output signals.
After power on, motor fails to work and gives out continuing beeps	The pull rod of throttle is not in the lowest position	Push the pull rod of throttle to the lowest position and reset the routine of throttle.
After power on, motor fails to work and gives out two long beeps and then two short beeps	ESC enters programming mode due to wrong pros and cons setting of throttle channel.	Adjust the pros and cons setting of throttle channel according to the specification of remote control.

The motor is in a inverted running	The order of wiring between motor and ESC is wrong	1. Alter any two connection line among three connection line between ESC and motor 2. Change direction by changing the rotation setting of motor directly with remote control or programming panels.
The motor stops in the flying.	The voltage of battery is lower than default protection threshold for low voltage, and the protection mode for low voltage is cut off.	1. Set the protection threshold for low voltage correctly. Fly with battery of full voltage. The protection mode for low voltage is set in mode of reduces power (default mode). Please land your model airplane in time if you find reduction of power during the flying. 2. Control the model airplane flying in the scope of remote control 3. Pay attention to the voltage of battery in remote control. Please land the model airplane in time if there is large reduction in voltage.
	Lost of throttle signals	1. Check the operation of remote control is correct. 2. Check if the remote control is suitable to receiver. 3. Please try restarting to recover normal operation if there is strong electromagnetic interference in the operating environment. If the problem occurs again and again, please change flying site for there is too strong interference from outside environment in this flying site.
	Poor contact in wiring.	Check the connection between plug of battery pack, output line of battery and connection line of motor is reliable.