RAF 100

AVIOS

AVIOS 1450MM SUPERMARINE

SPITFIRE Mkvb

INSTRUCTION MANUAL

SAFETY INSTRUCTIONS

1. Please read this manual carefully and follow the instructions before you use this products.
2. Our airplane is not a toy, it is only suitable for experienced pilots. If you are a novice then please only fly under the guidance of an experienced pilot.
3. Not recommended for children under 14 years old.
4. Please adjust and set up this plane according to the instructions and make sure to keep your body parts out of the rotating propeller all the times or it may cause damage to the plane or serious injuries to yourself.
5. Do not fly in thunderstorms, strong winds or bad weather.
6. Never fly R/C planes where there are overhead power lines, automobiles, near an airport, railway lines or near a highway.
7. Never fly R/C planes where there are crowds of people. Give yourself plenty of room for flying, this plane can fly at a very high speeds. Remember that you are responsible for others safety and the safe conduct of the flight.
8. Do not attempt to catch the plane when you are flying it.
9. The operator should bear full responsibility for the proper operation and usage with regards to this model. We at Hobbyking will not be responsible for any liability or loss due to improper use of this product.

INTRODUCTION

INTRODUCTION

The Supermarine Spitfire is THE defining aircraft of WW2, following on from the Mk1a was the Mk5 which represents the pinnacle of the early Sptifire's development. After the defensive campaign of the Battle of Britain the RAF moved steadily into an offensive roll and the Mk5 was to spearhead this change in the early years of the war. It was better armed and more manoeuvrable, the Mk5 gave the RAF and the other Allied forces (such as the USAAF) a decisive advantage over the Luftwaffe's Bf 109. It was also on equal terms with the later Bf 109F which saw these aircraft battling it out in the ETO (European Theater Offensive) and over the deserts of North Africa during the first half of the war.

The Avios Mk5 brings to the market (for the first time ever) a tribute not only to the pilots of the RAF but to those gallant American airmen of the USAAF with the multiple and historically accurate national markings supplied in the box. Beyond the unique markings, the attention to detail in the PNF model is matched only by its superb performance and grace in the air. The Mk5 is designed for 6S set-ups and boasts a range of features typical of the Avios standards. This includes the faithfully produced split flaps, scale outline, fine surface detail and finish along with an LED system.

Very simply, you will not find a better rendition of a Spitfire at this scale from anyone other than Avios.

The launch of this beautiful Spitfire also coincides with the 100 anniversary of the forming of the RAF. We feel the launch of this model at this time is a fitting tribute to all the serviceman who have served their country throughout these last 100yrs.

SPECIFICATIONS

Wingspan: 1450mm(57.5”)
Flying weight: 2640-2750g(92.6-96.5oz)
Servo: 2X9 for flap, 4X17 for aileron elevator and rudder
Motor: SK3 5055 380KV brushless outrunner.
Prop: 3 blades 15X10
Esc: Aerostar 80amp
Battery:3000-4000mah 6S.
Channel: 6channel required

1. Main wing.
2. Fuselage.
3. Horizontal Tail/Spar
4. Wing Radiator
5. Scale Plastic Parts
6. Control Accessories/Hardware.
7. Prop/Spinner.
8. Multiple Decal Sheets/Markings.
9. Instruction Manual.

1. Main wing.
2. Fuselage.
3. Horizontal Tail/Spar
4. Wing Radiator
5. Scale Plastic Parts
6. Control Accessories/Hardware.
7. Prop/Spinner.
8. Multiple Decal Sheets/Markings.
9. Instruction Manual.
10. Tropical ‘Volks’ Filter

REQUIRED TO COMPLETE MODEL:

In its "Plug N Fly" format the Spitfire Mk5 will still require some additional electronic components to get it "flight ready". Avios recommends the following products for optimum performance and great value. All these items are available at *HobbyKing.com .*

Transmitter: OrangeRx TX6i 2.4GHz 6ch programmable Tx
Mode 1 (International) Part # 9171001328-0
Mode 2 (International) Part # 9171001327-0
Mode 1 (EU) Part # 9171001329-0
Mode 2 (EU) Part # 9171001330-0

Receiver: OrangeRx R620X 6ch 2.4GHz Part # 9171000757-0

Battery: Turnigy Nano-Tech 3300mah 6S 65-130C with XT90 connector Part # 9210000206-0

NOTE: Your Mk5 Spitfire comes with a set of two scale markings/decals to choose from. Application of these decals is highly recommended BEFORE you begin assembly of the model. Please refer to 'Decal application' on pages 15-29 of this manual for illustrated guides on how to apply each set.

ASSEMBLY

1. Out of the box your Spitfire comes with a reinforced foam hinge for the elevator. However before assmbly can begin, the hinge line must be flexed back and forth 5-6 times to reduce the tension and the load on the servo.

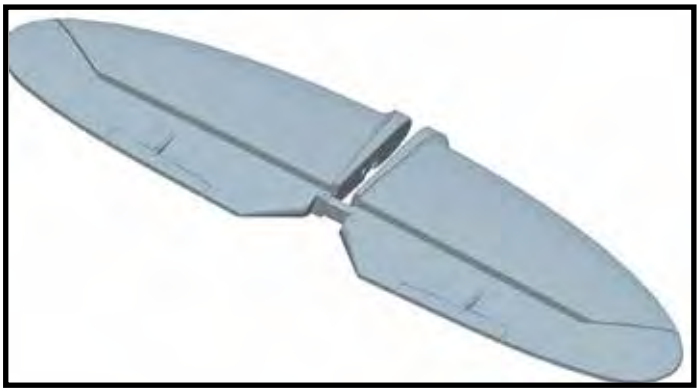

2. Insert one half of the carbon tail spar into the starboard horizontal tail (A). Before sliding this into the tail slot of the fuselage, be sure to insert the elevator joiner into the driving unit which will drive both elevators. Now install the remaining port side of the tail (B). Secure both halves with the supplied 2.3x6mm screws and the elevator joiner(2.3x6), This installation is self aligning, but do double check to ensure equal alignment to the vertical tail and the wing.

A.

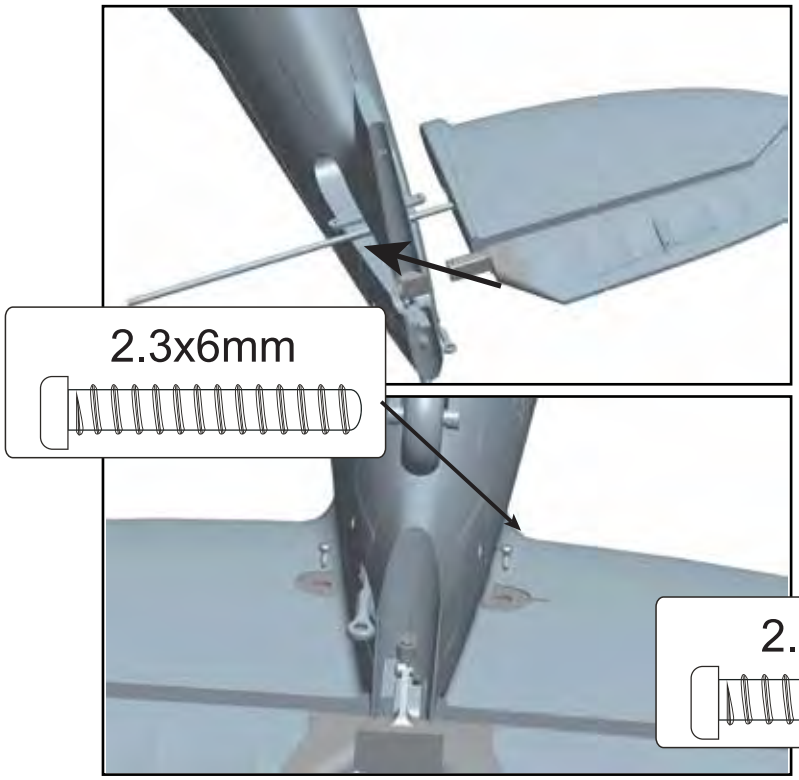

B.

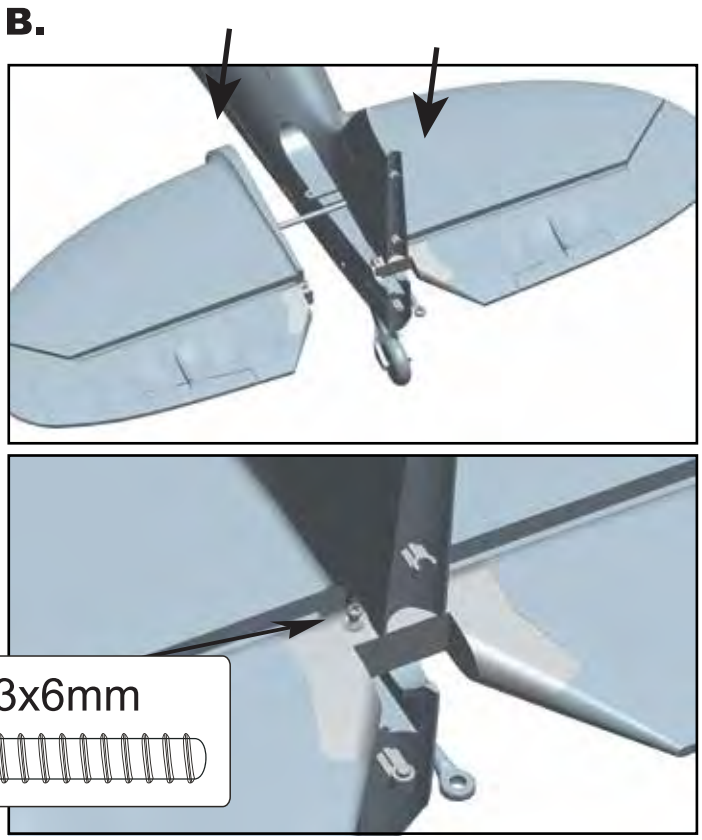

3. Insert the rudder and connect the rudder LED connector to the fuselage extension lead. Then pull the extension lead from the battery hatch end gently until it stops, then snap the rudder hinge halves to the fuselage hinge halves. The bottom hinge is the key to secure the rudder into place, please check to make sure that the rudder can move freely with no catching or resistance.
Using a pair of the pliers (ball link pliers preferably) connect the rudder push rod to the rudder control horn. To ensure both the elevator and the rudder are neutral (with the servo centered), loosen the grub screws of the piano wire fastener and slide along the push rods until both are neutral. The steerable tail wheel can be adjusted in the same way, tighten all the grub screws firmly when done.

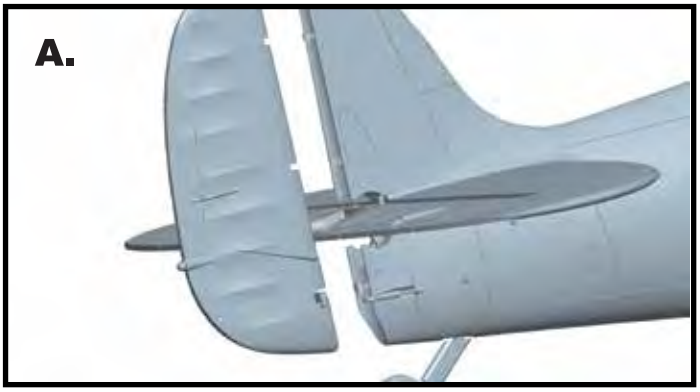

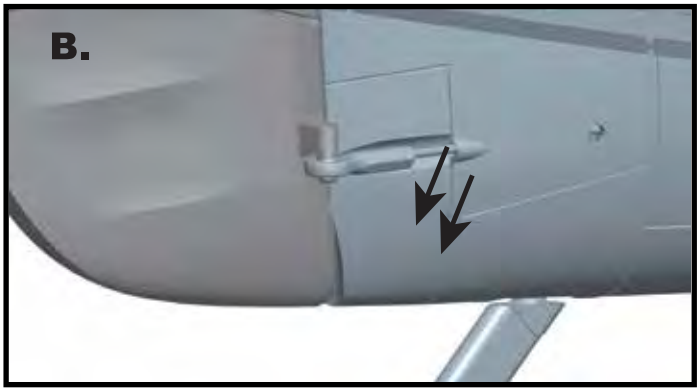

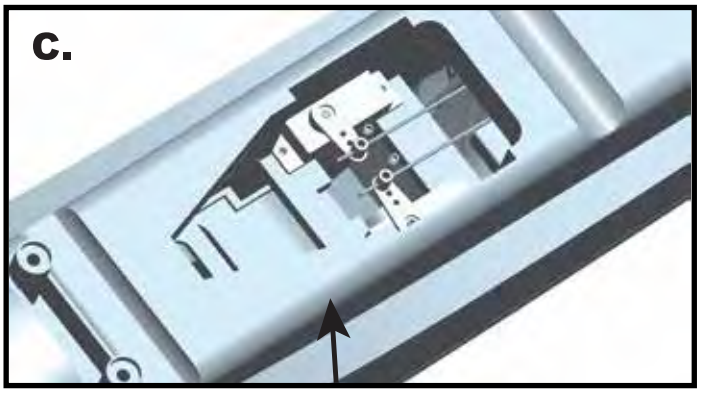

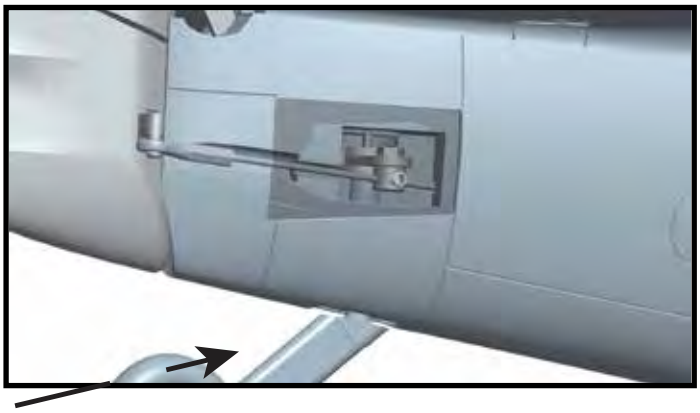

Note: Each ball link has a faint circle molded on one side.This denotes the side that should be connected to the ball joint.

4. Connect the ballinks to the balls first.
With the aileron control horn at 90° to the wing surface (neutral) insert the aileron push rod into the top hole of the control horn, adjust the length of the push rod as necessary so that the aileron remains neutral. Secure the push rod to the servo horn with the supplied plastic keeper. Repeat this process for the flaps, the only exception is that the flap servo horns must be positioned as far forward as possible. This will ensure the flaps are up when the push rods are connected.

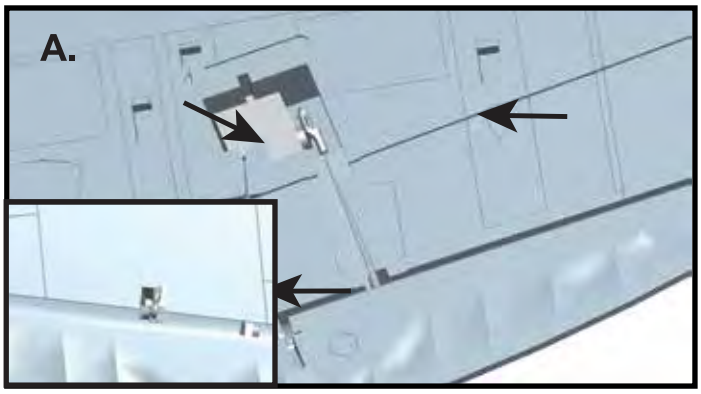

5. Using a small amount of the supplied contact glue, secure the under wing radiators, the servo covers(check the fit first, then glue into place), the cannon magazine blisters (use the 2 small holes to center) and the pitot tube. Insert the 2 main wing spars into one wing half.

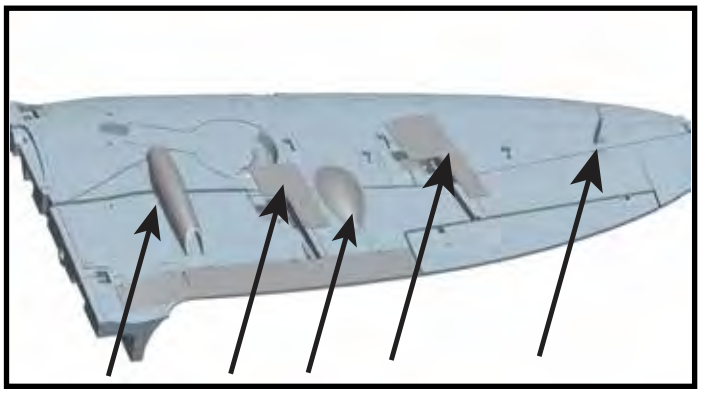

B.

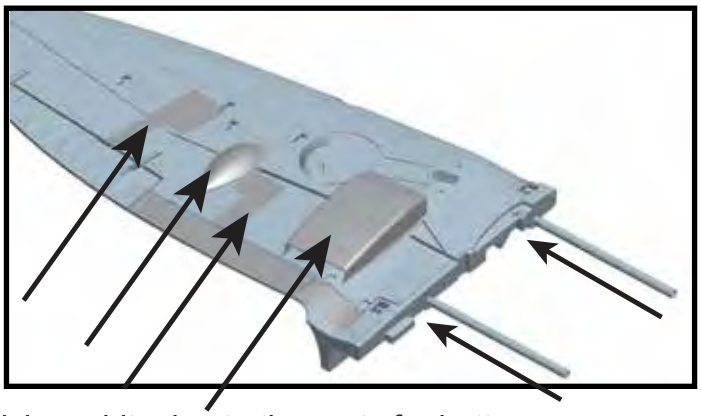

6. Connect the 2 wing halves together (we suggest applying a bit glue to the roots for better security). The cannons can also be glued into place at this point.

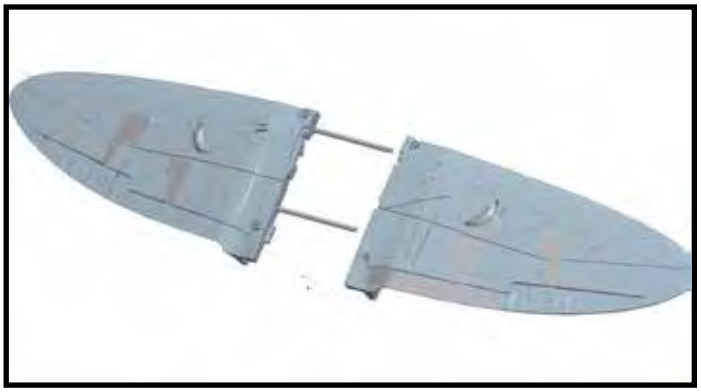

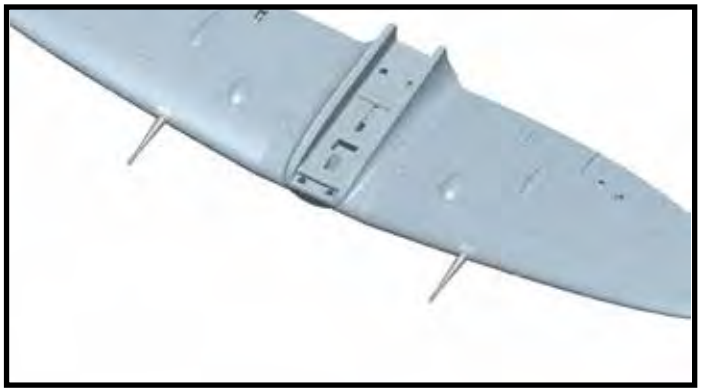

7. Offer the wing up to the fuselage and ensure the servo wires pass through into the battery area of the fuselage (A). Check again that no servo wires are caught between the wing and fuselage before securing in place using the four 4x16mm bolts supplied.

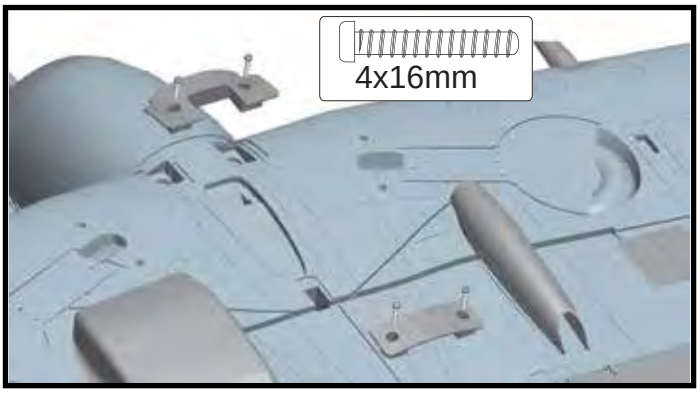

8. We recommend you seal the slot between the wing panels using the supplied plastic strips. If your choice is the ETO, then you can glue the air scoop on, if you have the Desert version please glue the two pieces of the volks filter in to place (be sure not to glue the rear and the front filter part together), then secure the cowl using (2.3x10) screw.

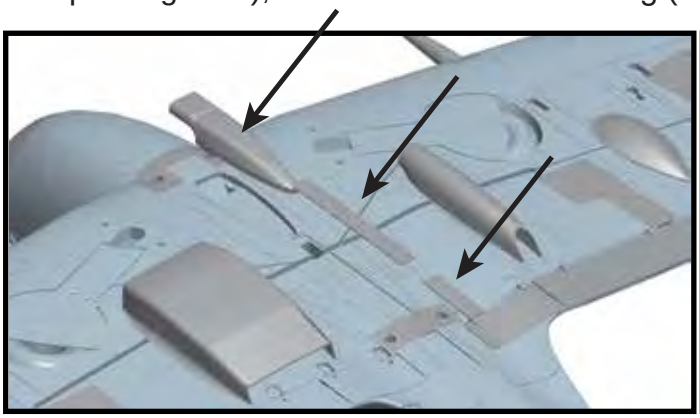

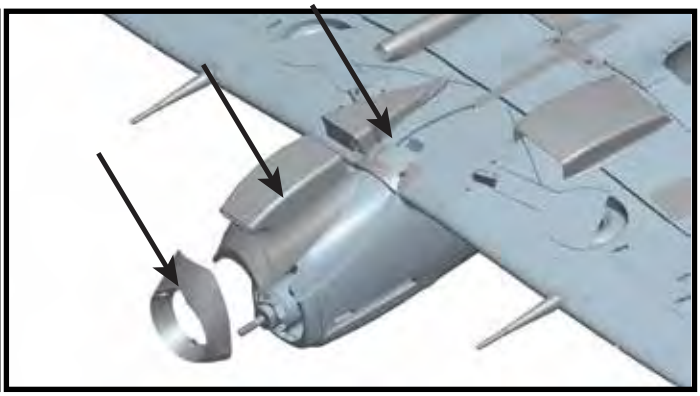

9. Glue into place the fish tail and the exhaust stacks , the fuselage aerial and the rear view mirror.

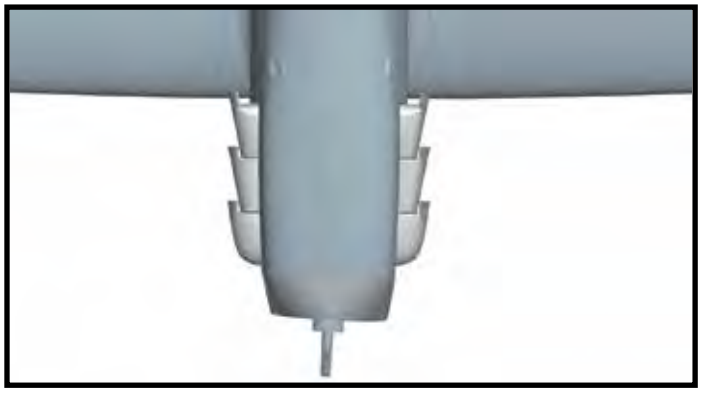

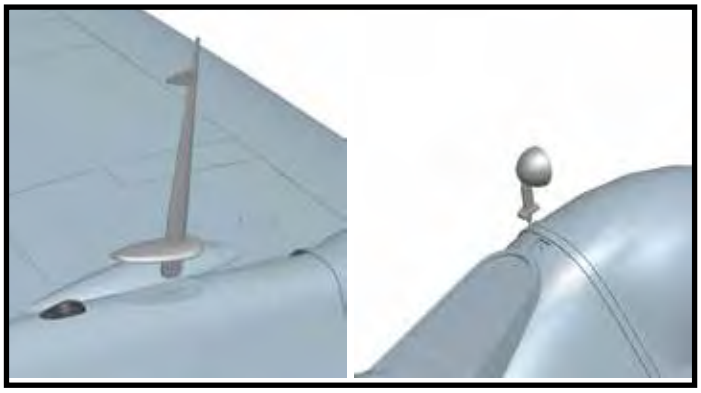

10. Install your choice of 6ch receiver ensuring all the wires are clear and held away from the servo horns. The chosen battery should be fitted into the battery compartment as far forward as possible to achieve the correct C of G as shown on Page 10.

11. Assemble the propeller as shown using the supplied 3x25mm screws, pull these screws up evenly. Once assembled slide the spinner backplate and prop assembly onto the motor shaft, make sure the hex cutout at the rear fits over the hex at the base of the shaft. Then fit the prop nut and tighten firmly, finally fit the spinner using the supplied 3x32mm screw.

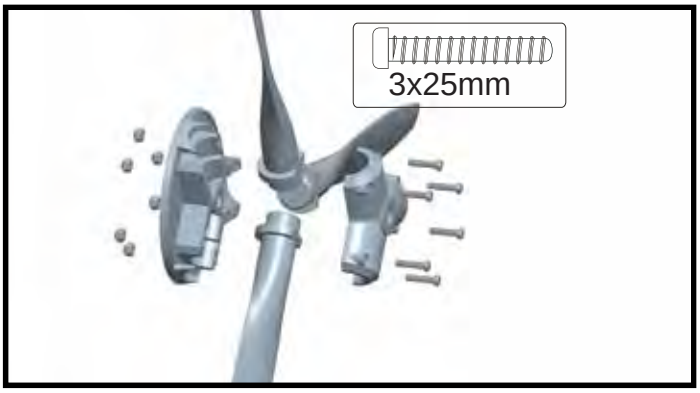

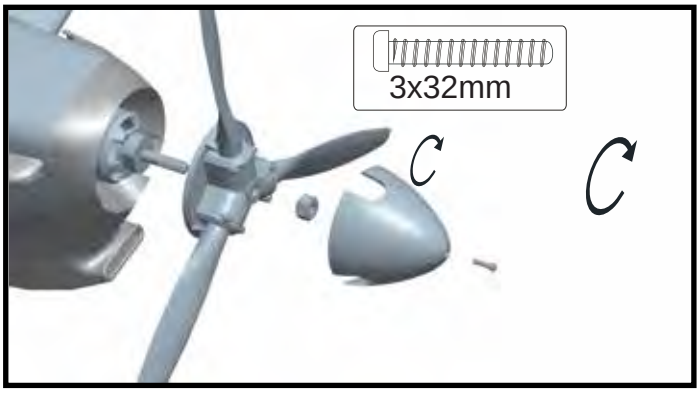

Optional FPV Version:

1. Install the FPV gear by sliding and opening the canopy rearward, then disassemble the head rest, Glue the FPV gear as far rearward as possible, it is also best to remove the wind shield to reduce the distortion of the camera image.

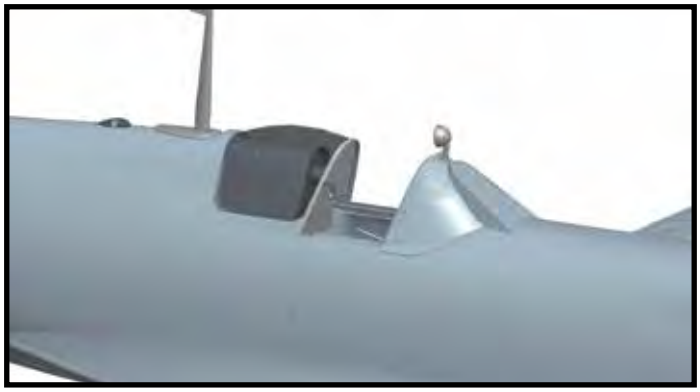

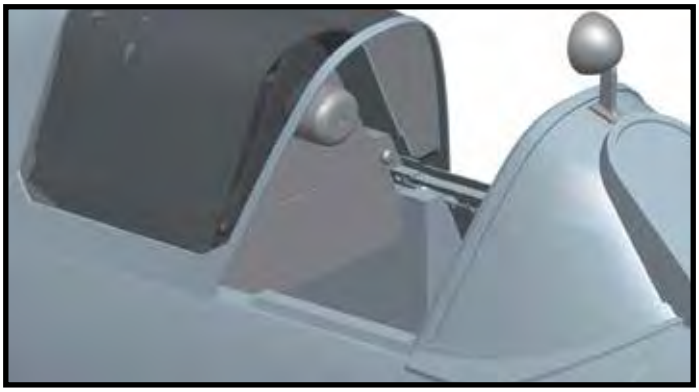

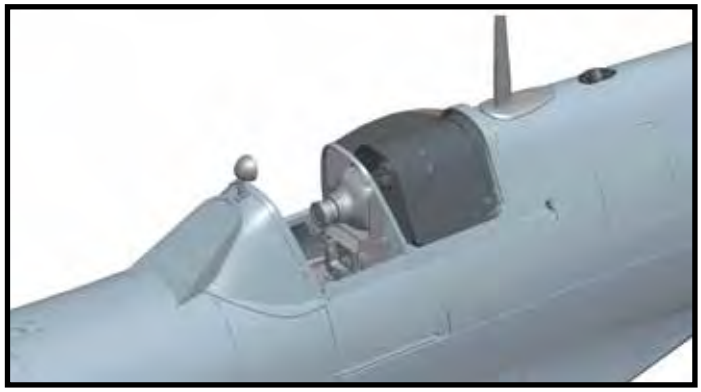

2. You can cover the air vent under the fuselage if the canopy is open, this gives it a better scale appearance.

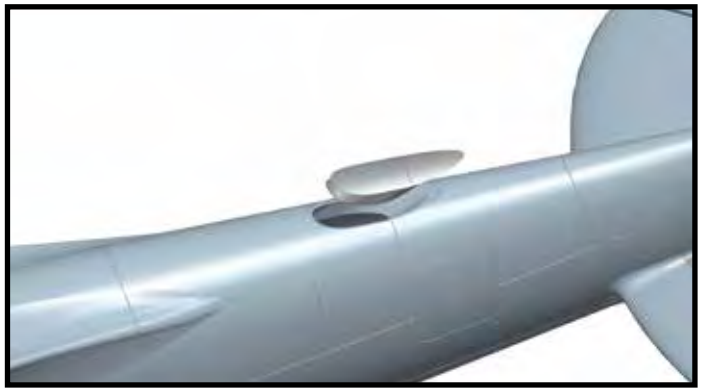

SETTING UP YOUR MODEL:

1.With your receiver installed and the servos plugged into their correct channels you can connect the flight battery to the ESC and power up the electronics. Once the model is armed ensure all the servos are centered correctly and all control surfaces are neutral. If not then adjust the push rod lengths until the control surface is neutral.

Note: For safety reasons, it is advised that this is done with the prop removed from the model.

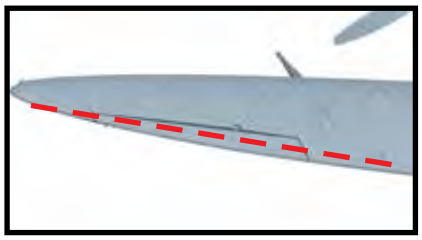

Ailerons

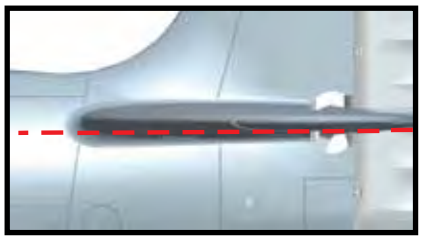

Elevator

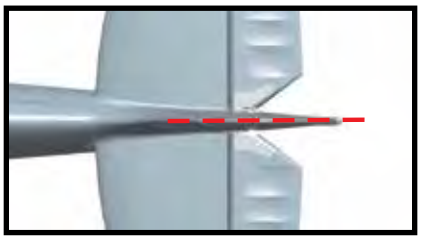

Rudder

2. Check all control surfaces are moving in the correct direction with the applicable stick input (see below)

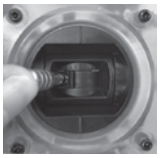

Roll left

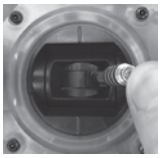

Roll right

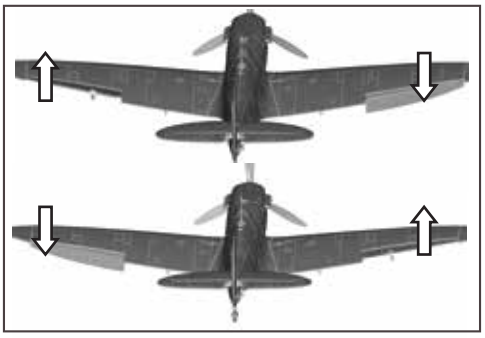

Aileron (Roll)

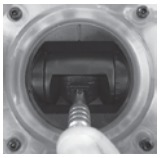

Pitch up

Pitch down

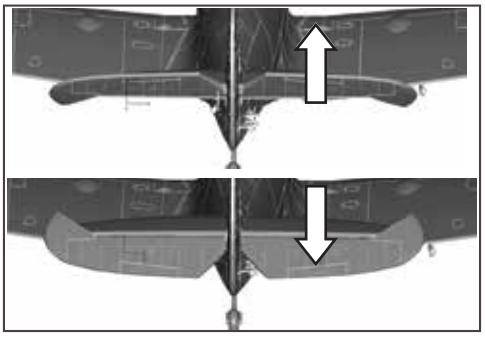

Elevator (Pitch)

Yaw left

Yaw right

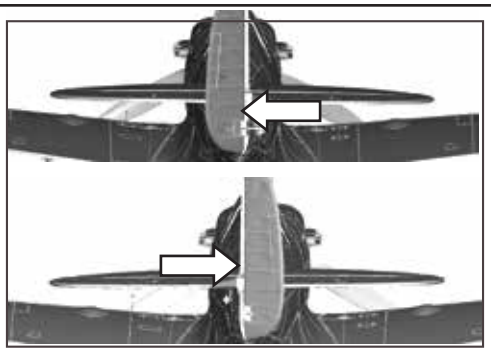

Rudder (Yaw)

3. The Spitfire Mk5 handles very well in flight and that's not down to good design alone, but a good pre-flight set-up too. Before you fly your Spitfire please follow the recommended settings below for optimum handling and performance.

Control throws:

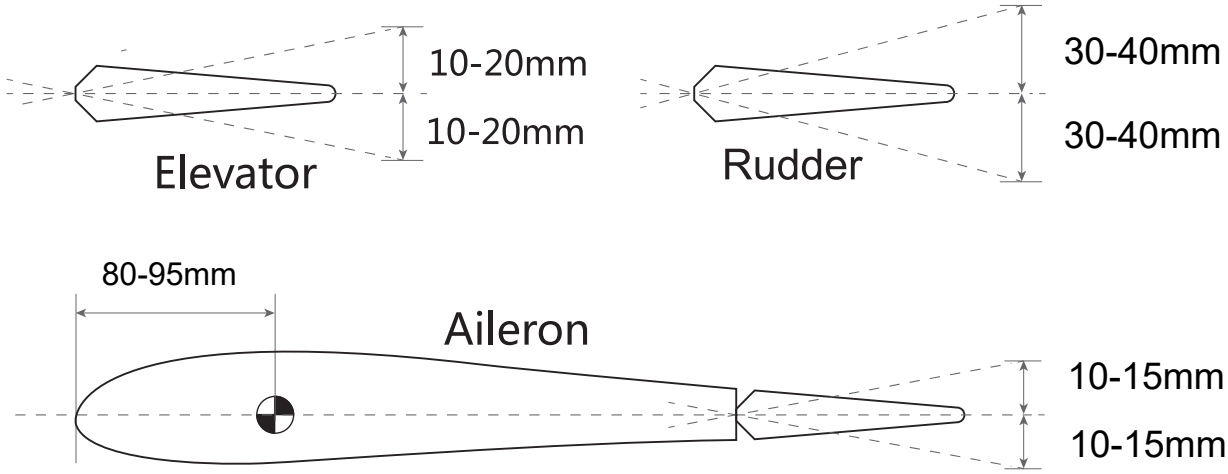

- Elevator: "Low Rates" 10mm "High Rates" 20mm each direction from neutral.
- Rudder: "Low Rates" 30mm "High Rates" 40mm each direction from neutral.
- Ailerons: "Low Rates" 10mm "High Rates" 15mm each direction from neutral.

The above are recommendations for your first flights. Once you have test flown the model you can adjust to suit your particular flying style.

4. Flaps on the Spitfire should be set for 3 stages (up/no flap, mid flap and full flap).Set these either mechanically by adjusting the clevises or by using your computer radio. Set the mid flap position to 40° and full flaps to approximately 87° as shown. In the up/no flap position ensure the flaps are closed fully but without straining the servo. Also check that both sets of flaps deploy the same amount at every stage.

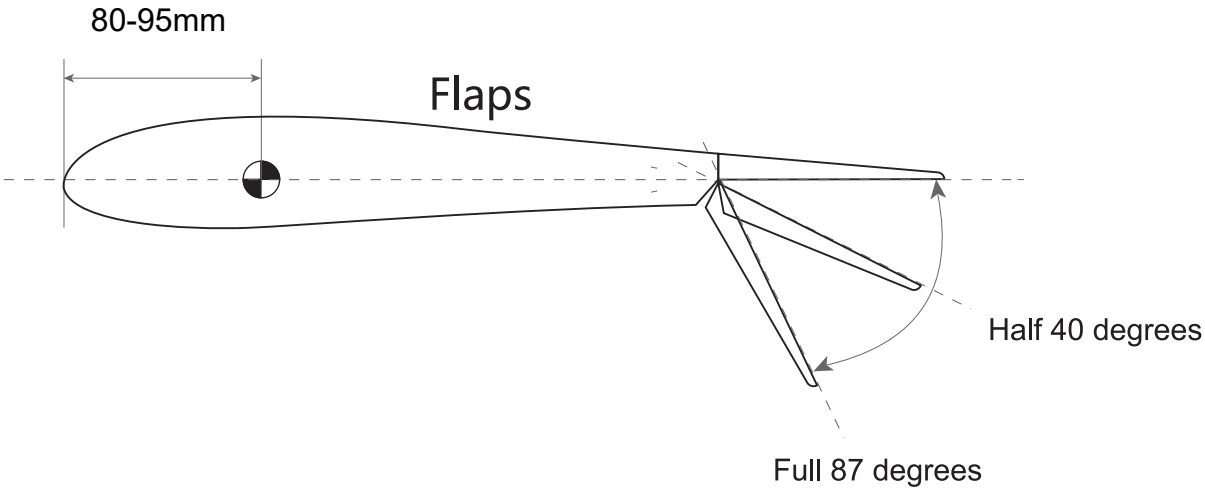

5. The center of gravity (CofG) for the Spitfire is between 80-95mm from the leading edge of the wing. If you use the recommended "Turnigy Nano-Tech" 3300mah 65C 6S lipoly pack then the forward balance point will be achieved by simply having the battery as far forward as possible. If using a lighter battery then some nose weight will need to be added, if a heavier battery or you prefer a more rearward CofG then slide the battery rearwards in the battery compartment.

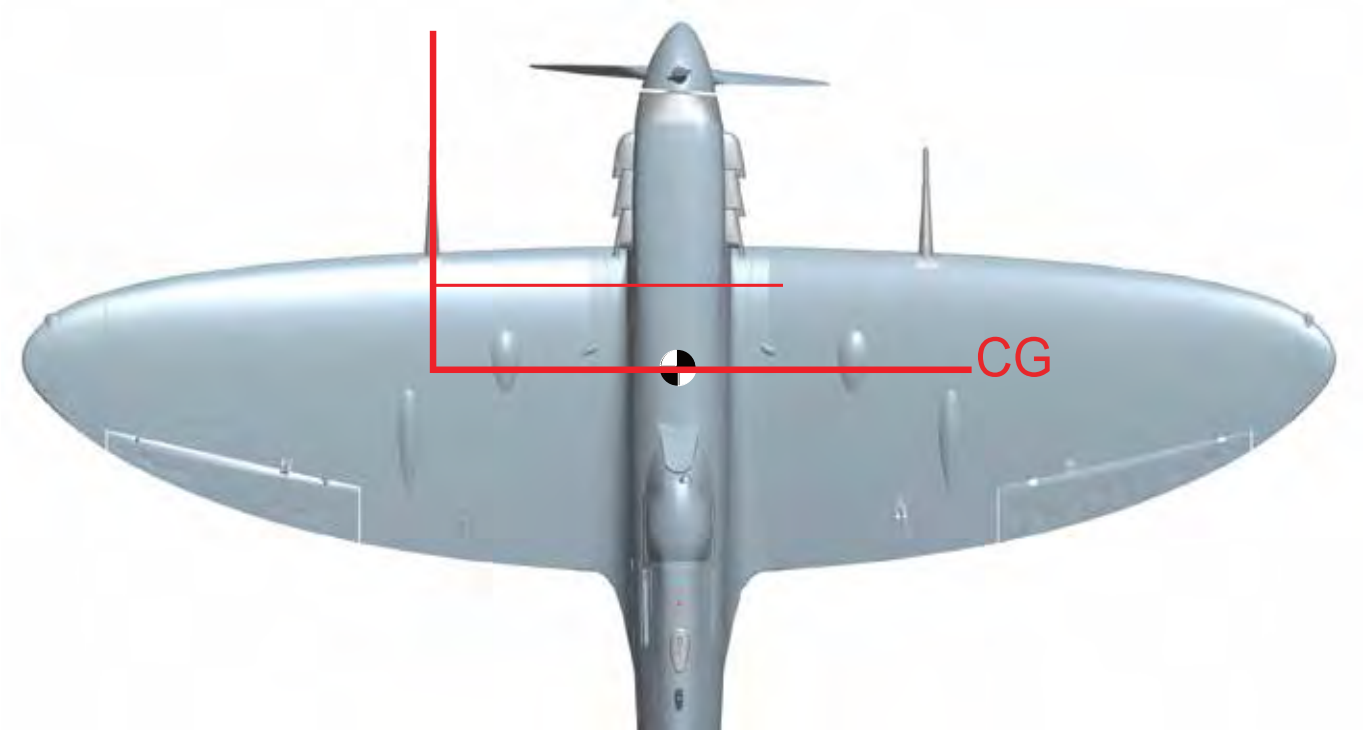

C of G is between 80-95mm when measured from the leading edge of the wing at the root. Carry out this check with the gear retracted and the model inverted.

With the assembly and the set-up of your Avios Mk5 Spitfire complete you should be ready for your first flight. However we recommend that you read and follow the advice given in the following pages of this manual before flying.

MODEL FLYING PRECAUTIONS

• Select your flying area carefully. Always choose an open space that is clear of trees and buildings and is away from crowded area's. Avoid flying near roads, electric/telephone poles and wires, water or close to a full size active airfield.

• Do not fly the model in poor weather, high winds or low visibility. Rain and storms should also be avoided.

• Never attempt to catch the model whilst flying, even a slow moving model can cause injury. Not only to yourself but also to others and can damage your model.

• This model is recommended for children of 14 years of age upwards. All children no matter what age should always be supervised by a responsible adult at all times when operating this model.

• Always unplug the battery when not using the model, never leave the battery installed in the model.

• Remember to keep clear of the propeller at all times when the battery is connected.

• Before flying always turn on your transmitter first, and only when your transmitter is confirmed as transmitting do you plug in your flight battery.

• Once you have finished flying, disconnect the battery first and only then switch off your transmitter.

• Exercise caution when charging your batteries. Follow the battery manufacturers safety guidelines when doing so.

PRE-FLIGHT CHECKS

1. Always range check your model before any flight, especially when flying it for the first time. Follow your radio manufacturers guidelines for carrying out this check.

2. Check that all the screws, bolts and mounting points are secure, including the control horns and clevises.

3. Only fly with fully charged batteries, both the model and transmitter. Failure to do so could result in a loss of control, damage to your model or persons/property around you.

4. Inspect the model and propeller for any damage that may have been caused in transit, if in doubt do not fly.

5. If this is your first flight then double check that the C of G is correct, if not then adjust the position of the battery accordingly.

6. Switch on your transmitter and connect the flight battery in the model. Check all the control surfaces are working correctly and in the correct direction. Listen for any unusual sounds when the servos are operated.

7. With the model held securely and the propeller free of any obstructions increase the throttle slightly to confirm the correct rotation. The model should want to pull forward if the rotation is correct.

8. If you are an inexperienced model pilot then please seek the help and assistance of an experieced pilot to perform the final checks and to test fly the model for you.

FLYING YOUR SPITFIRE

Before flying make sure you have followed closely the set-up guidelines on pages 6 to 9. Start by taxying around a little to get used to the ground handling. Always make sure you use full up elevator when taxying to avoid nosing over and to keep pressure on the tailwheel, keep the flaps up and use the throttle gently. This will keep the model tracking steady and true, plus it has the added bonus of looking more scale like.

For take-off you will want to hold some right rudder to counter the rotational torque on the initial roll out. Slowly advance the throttle and ease of a little of the full up elevator but keep enough to still hold the tail on the ground, correct with the rudder as necessary to keep the Spitfire running straight and true. As the speed builds ease of the amount of up elevator so that the tail lifts and keep increasing the throttle. At about 3/4 throttle the Spitfire should start to lift off the ground and begin the climb out.

Once airborne retract the landing gear as soon as you are comfortable and start enjoying the thrill of flying a Spitfire. With the power of the 6S set-up you will find you can cruise happily on around 50-60% throttle which is more than sufficient for a scale speed to be achieved. Opening the throttle up to full is very exciting but generally is not necessary. A full airshow routine can be performed including loops, rolls, low banked passes, split S's etc and all the large and vertical manoeuvres are possible. An average flight time with mixed throttle settings is approximately 7-8 minutes. Your Spitfire may drop a wing if really pushed near the stall, that said the stall is quite benign and any wing drop can be picked up easily by the rudder, do not attempt to pick the wing up with ailerons as this will only exaggerate the problem, a small amount of down elevator then a small application of power will get you flying properly once more, explore the stall characteristics and recovery at a reasonable altitude.

Landing the Spitfire Mk5 is a real pleasure and a treat for those who like to practice scale type approaches as the Spitfire needs to be flown onto the ground through a powered descent. Bringing the wheels down and selecting mid flap gives no noticeable trim change. Once lined up on finals to the runway and at about 8ft you can select full flap if desired, be sure to maintain good throttle management. As soon as the Spitfire settles onto the ground hold in full up elevator to prevent the model nosing over. Retract the flaps and taxy back to the pit area.

SPITFIRE TIPS

• For optimum flight performance and model longevity we recommend that you always fly with a balanced propeller. The supplied propeller should be balanced but it is always good practice to check this.

• Keep all leads within the fuselage area as tidy as possible. A tidy wiring set-up looks better, allows for easier access to all the internal components, better battery installation, increased airflow around the electronic components and also reduces the potential electronic signal interference (noise).

• Inspect the propeller frequently, especially if you have suffered a hard landing or prop strike. If the propeller is in any way damaged it must be replaced and any loose fixings should be tightened.

• It is important that your flight battery is as far forward as possible for initial flights to prevent you from flying the Spitfire in a tail heavy configuration. Ensure you follow the C of G guidelines on pages 6-8 and 9 before flying your Spitfire.

• A Turnigy Nano-Tech 3300mah 6S 65-130C is the preferred battery pack to use on the Mk5. Other packs can of course be used but ensure you check the C of G before flying.

• Do not use full flaps on a windy day, only use full flaps on days when there is little or no wind. Full flap requires good throttle management to prevent the model from stalling so initially practice the use of full flap at a reasonable altitude.

• To avoid any chance of your Spitfire tipping onto its nose on landing switch to high rates on the elevator as soon as the model settles onto the ground after landing and hold full up elevator.

• Do not leave your model in direct sunlight or in a hot vehicle for prolonged periods as this will have an adverse effect on the foam surface of the model.

Thank you again for purchasing the Durafly Spitfire Mk5. We hope you'll have many happy days of flying and look forward to bringing you more Durafly models in the future.

Don't forget, spare parts are available for this model, please see the next page for details.

COMMON SPARE PARTS MK1a/Mk5 ETO/MK5 DESERT

Prop adapter:
Part No.
9499000090-0

Motor:
Part No.
9499000093-0

Retracts:
Part No.
9499000109-0

Propeller:
Part No.
9499000095-0

Accessories
Part No.
9499000091-0

Motor mount:
Part No.
9499000096-0

SPARE PARTS ETO Mk5

Fuselage:
Part No.
9499000098-0

Main Wing set:
Part No.
9499000099-0

Horizontal tail:
Part No.
9499000100-0

Foam hatch:
Part No.
9499000101-0

Canopy
Part No.
9499000102-0

Main landing gear:
Part No.
9499000103-0

Rear WheelSet:
Part No.
9499000104-0

Spinner set:
Part No.
9499000105-0

Cowl:
Part No.
9499000106-0

Scale parts:
Part No.
9499000089-0

Decal set
Part No.
9499000108-0

SPARE PARTS DESERT Mk5

Fuselage:
Part No.
9499000112-0

Main Wing set:
Part No.
9499000113-0

Horizontal tail:
Part No.
9499000114-0

Foam hatch:
Part No.
9499000115-0

Canopy
Part No.
9499000116-0

Main landing gear:
Part No.
9499000117-0

Rear WheelSet:
Part No.
9499000118-0

Spinner set:
Part No.
9499000119-0

Cowl:
Part No.
9499000120-0

Scale parts:
Part No.
9499000121-0

Decal set
Part No.
9499000122-0

Volks filter:
Part No.
9499000123-0

DECAL APPLICATION GUIDELINES

Applying the supplied decals will take you longer than assembling the model. This is because great care must be taken when doing so. Please follow carefully the guidelines below to achieve the best possible finish on your Spitfire Mk5.

Note:

**** The decals supplied are vinyl type decals and are supported on a clear adhesives fronting film. These require care and attention when applying so please follow the below guidelines and the techniques outlined for the best results.***

1. Study the scheme reference sheet carefully and understand fully where each decal should be applied (starting from page 18).

2. Seperate the decal you wish to apply (decals are grouped according to their layout on the model) from the main sheet. The entire decal sheet (including the paper backing) is pre-cut for you so you can seperate each group of decals as required.

3. Before lifting from the paper, rub the surface of the clear protective film/fronting to ensure all of the decal sticks to it. This will ensure the marking lifts fully off the backing paper in tact.

4. Peel the fronting off of the sheet ensuring the entire decal lifts with it.

5. Position the decals/fronting carefully on the model according to the decal reference sheet then gently rub (using a dry cloth) the decal in place, rubbing from the center of the decal outwards, to avoid wrinkles and air bubbles.

6. If air bubbles are present, use the tip of a sharp blade to make a small hole in the bubble then rub over it again to push the air out.

7. Once the decal is firmly rubbed down and any air bubbles are removed, you can slowly remove the front clear protective film. DO NOT pull this clear film upwards to remove it, instead pull the film slowly off to the side. This will ensure the decal doesn't lift up from the surface of the model when you remove the clear film. See picture A.

8. Very gently rub the decal again with a cloth now that the clear film is removed to ensure all edges are firmly stuck down.

9. Finally the use of a covering iron is STRONGLY recommended to seal the decals to the painted foam surface and prevent them from lifting at the edges over time. Set the iron to a low temperature and gently run the iron lightly over the surface of the decal as illustrated on the following page. Use of a cloth to cover the head of the iron is recommended to help prevent damage to the foam and the decal. A household iron can be used if no covering iron is available. See picture B.

Pre-applied stickers.

Your Spitfire comes with some stickers already applied out of the box. Keep in mind that this model has travelled a long way and has experienced many temperature changes. These occasionally causes the edges of the pre-applied stickers to lift. Use an iron in the same way as you did on the main decals you have applied and this will seal down the decal once more.

DECAL TIPS

• Rub the clear front film before you remove the decal from the paper backing to ensure it lifts fully from the backing.

• Remove the clear fronting by pulling it gently of to one side once the decal has been applied. DO NOT pull this clear film directly upwards as this could cause the decal to tear.

• To avoid bubbles under the larger decals use a sharp blade to remove the small molding marks from the surface of the foam where the decal is to be applied.

• Scale "Maintenance" decals found on "p.32" sheet can be used on either scheme (these are vinyl type).

• Position all decals carefully, once applied they cannot be removed without lifting the paint from the model.

• Be patient and take your time when applying the decals, this will reward you with the perfect finish.

• It is strongly recommended that a covering iron is used to seal the edges of the decals. If not, changes in temperature can result in the lifting of the edges.

Spitfire MkVb EP120 'City of Winnipeg', Sqn Ldr Jeff Northcott, No.402 Sqn. RCAF, Duxford, Nov. 1942

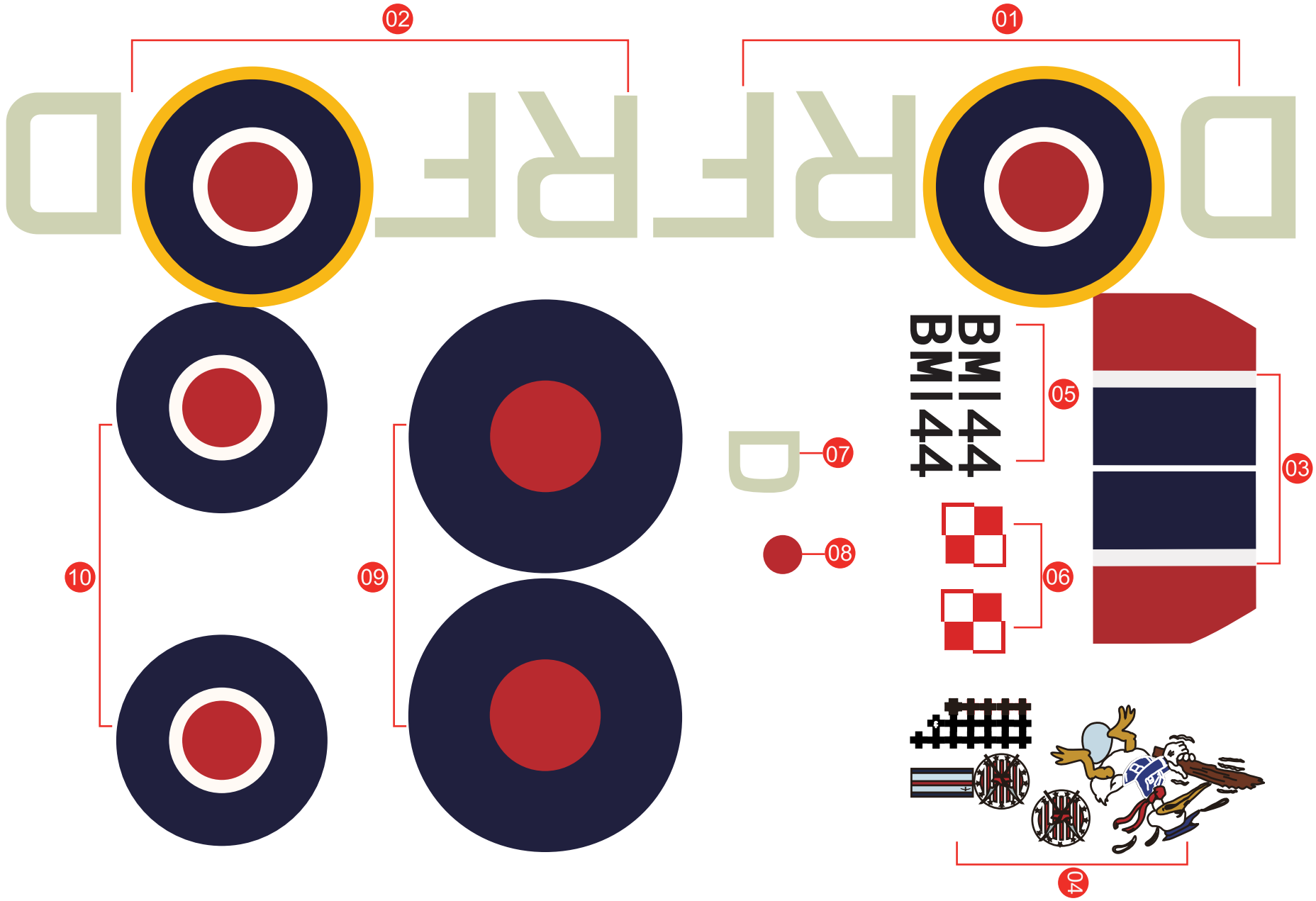

SPITFIRE Mkvb

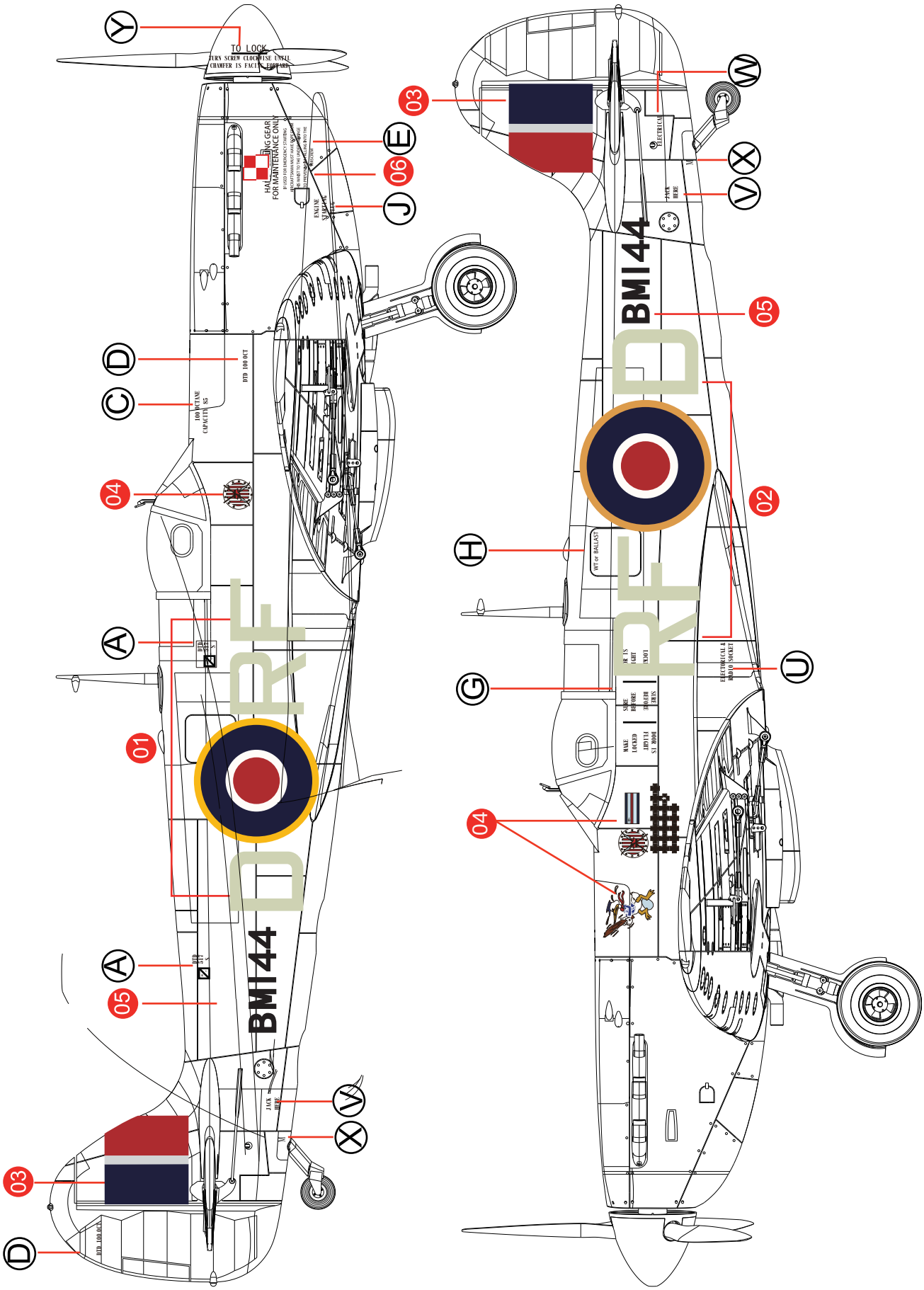

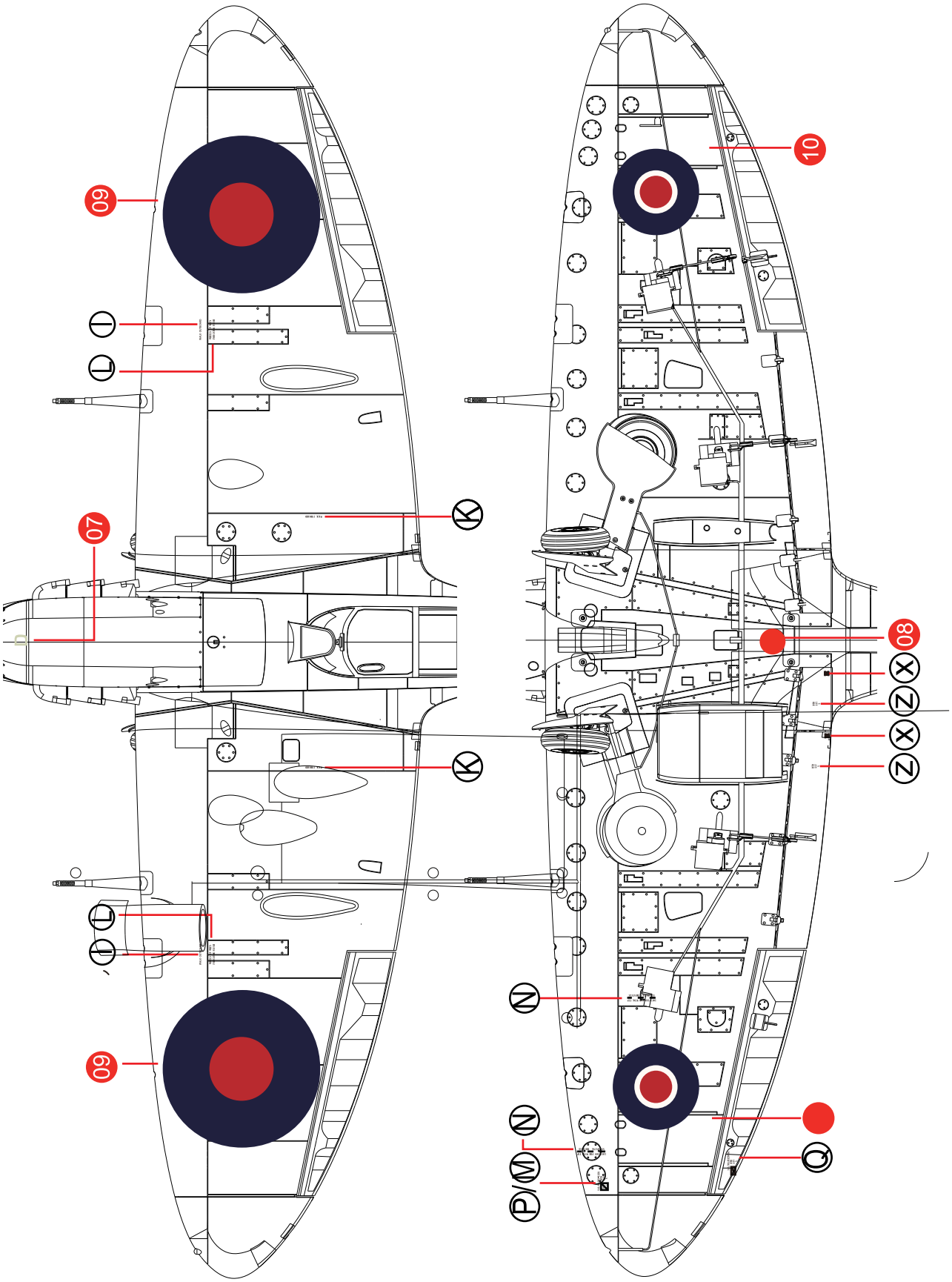
09
I
L
07
K
K
L
I
09
10
08
X
Z
X
Z
N
N
P/M
Q

SPITFIRE Mkvb

Spitfire MkVb BL255 'BUCKEYE-DON', Capt. Dominic Gentile, 336th FS, 4th FG, USAAF, Great Sampford, Sept. 1942

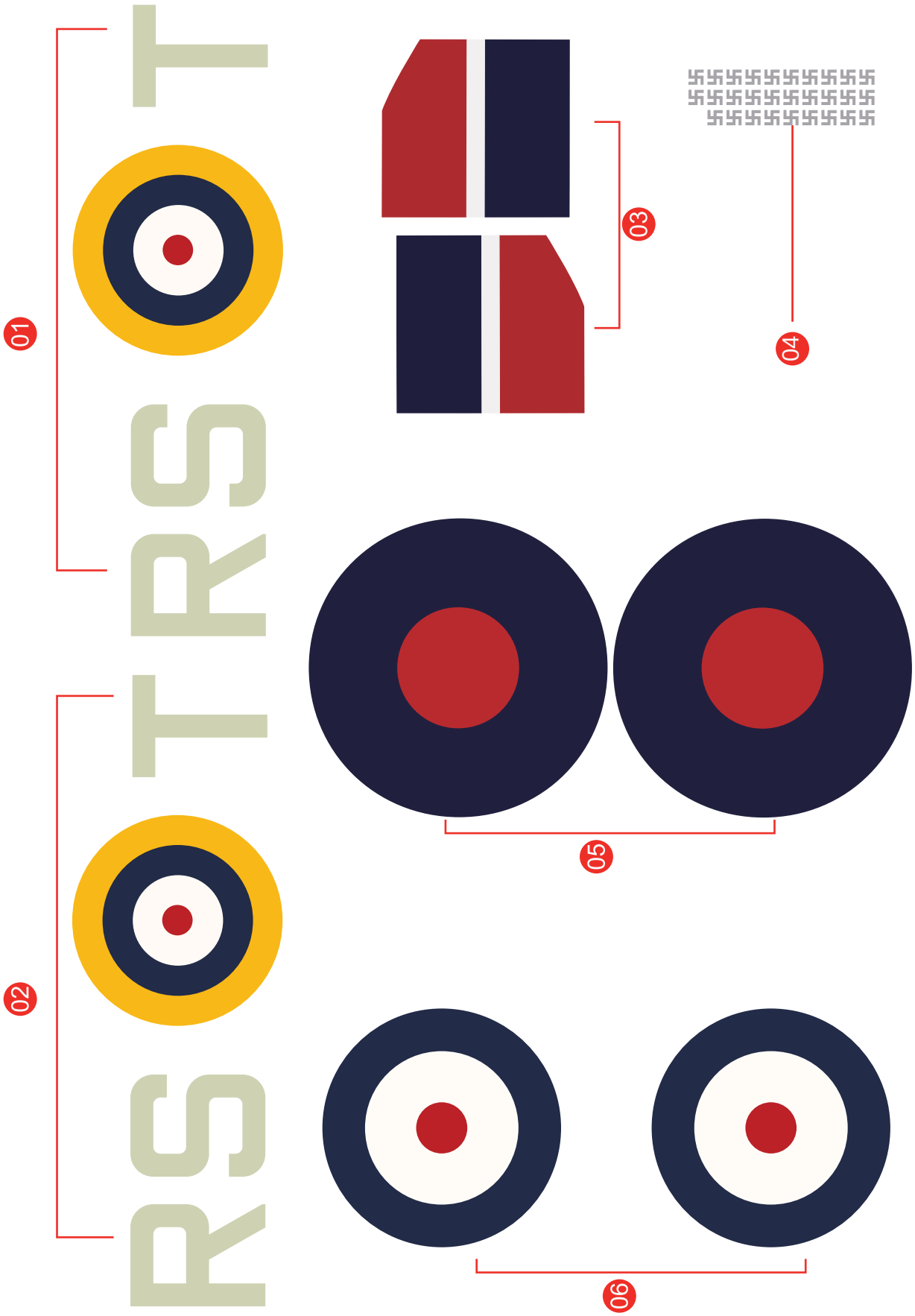

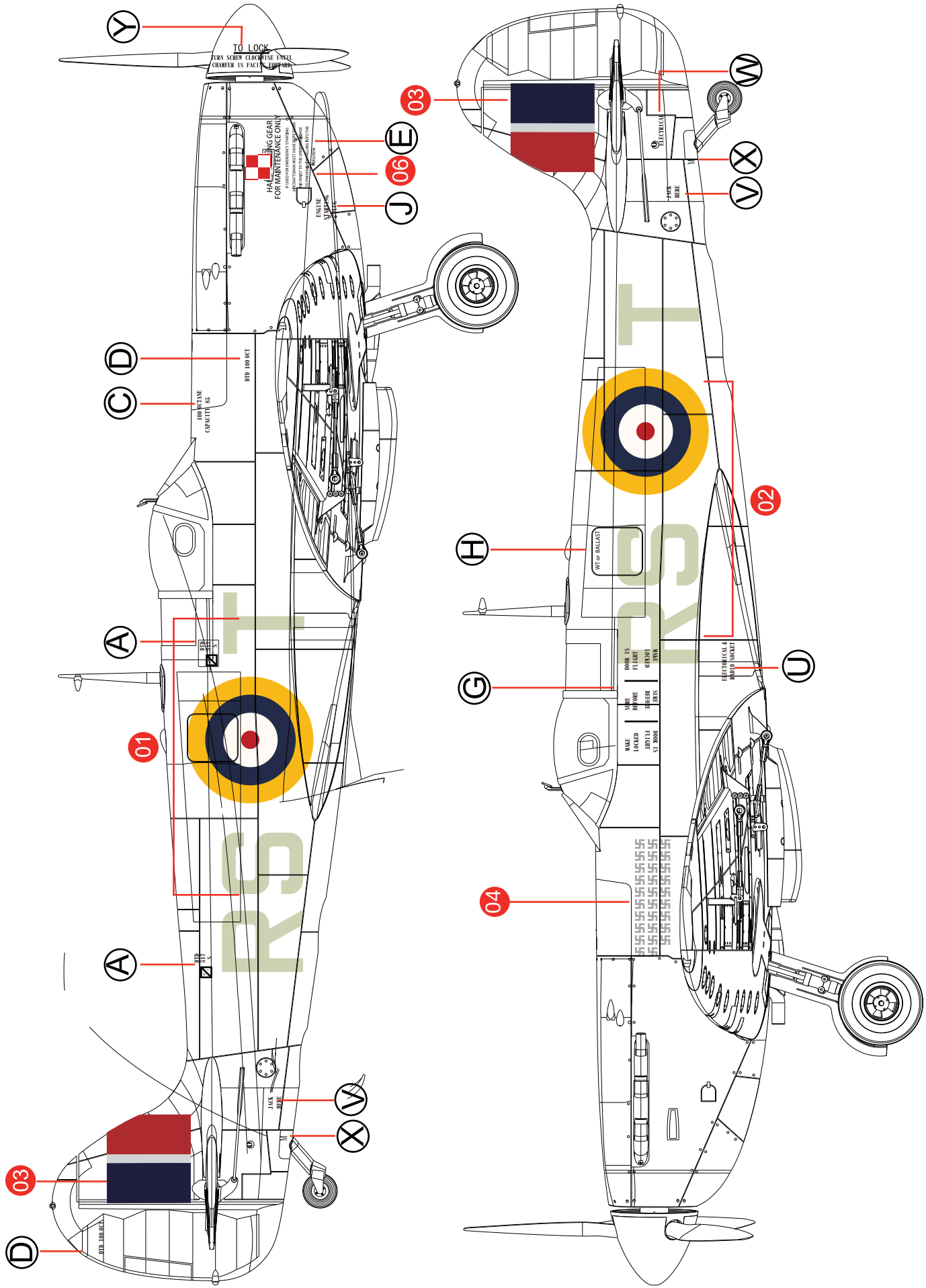

TO LOCK
TURN SCREW CLOCKWISE UNTIL CHAMFER IS FACING FORWARD
HALF LANDING GEAR FOR MAINTENANCE ONLY
ENGINE STARTING
DTD 100 OCT
100 OCTANE CAPACITY 85
JACK HERE
ELECTRICAL
WT or BALLAST
DOOR IS FLIGHT LOCKED
MAKE LOCKED
SIDE BEFORE BELOW
ELECTRICAL & RADIO SOCKET
RSOT
01
02
03
04
06
A
C
D
E
G
H
J
U
V
W
X
Y

SPITFIRE Mkvb

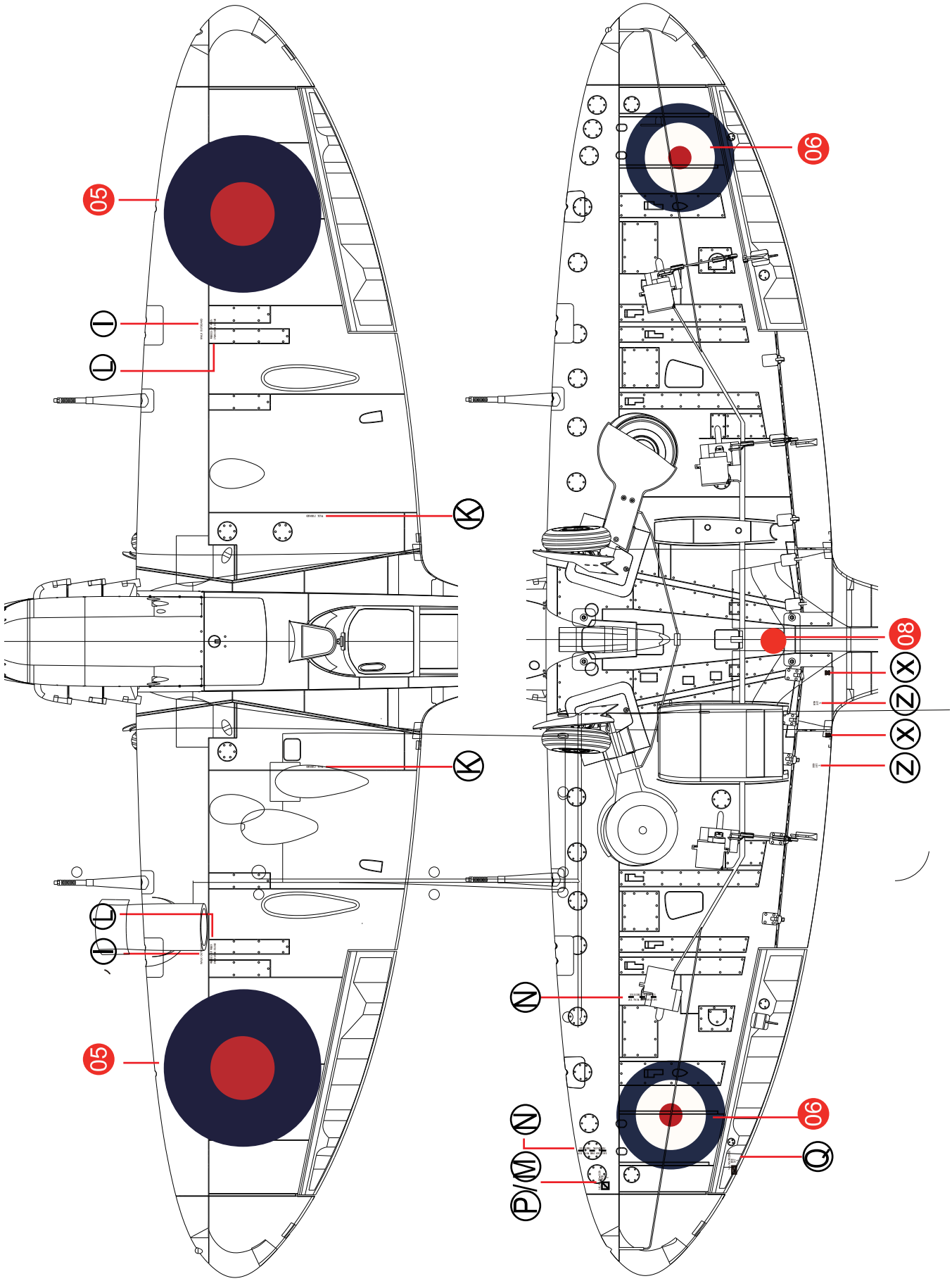

Spitfire MkVb EP706 , Plt Off George Beurling, No 249 Sqn,
RAF, Takali, Malta Aug. 1942

SPITFIRE Mkvb

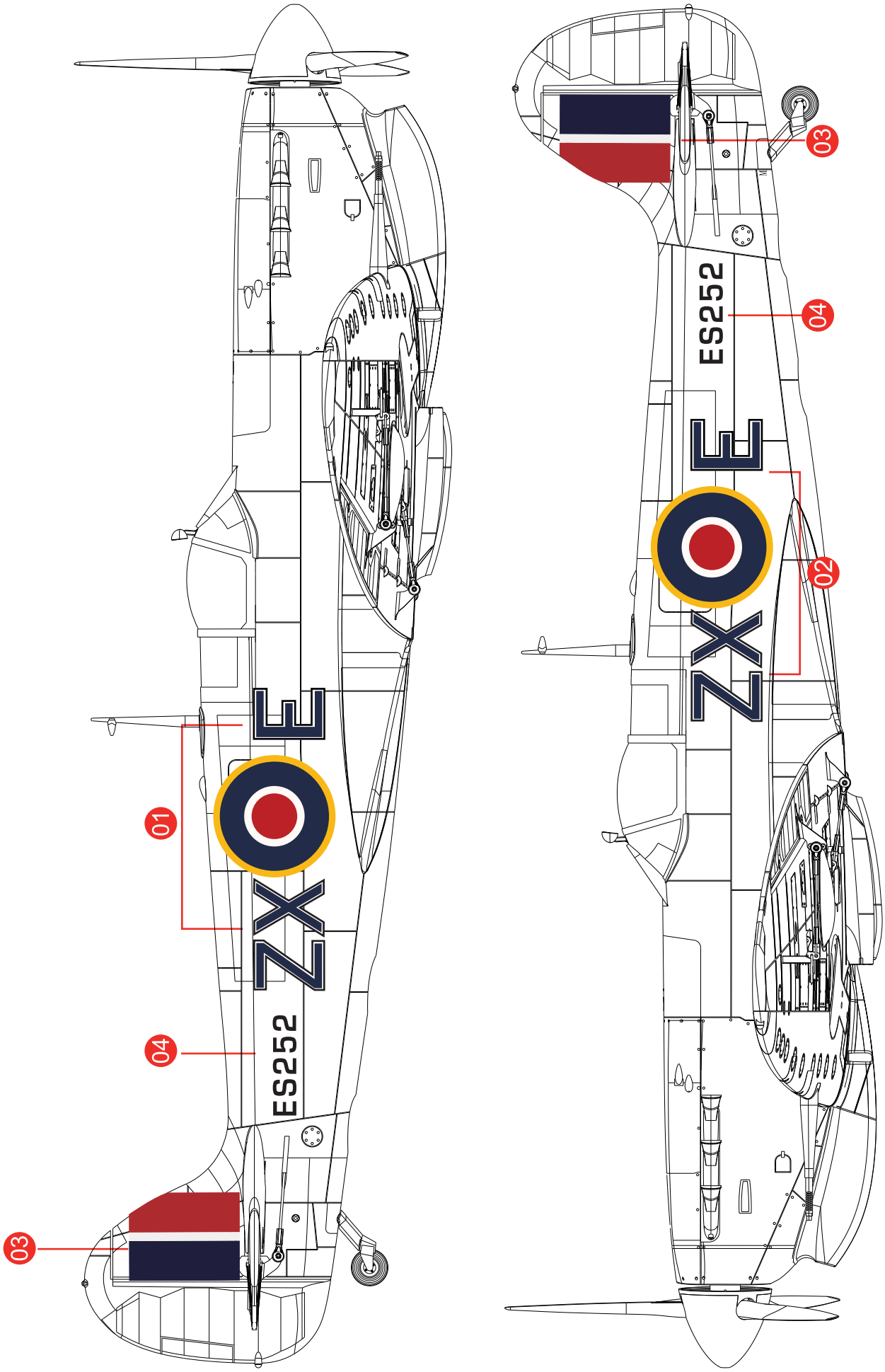

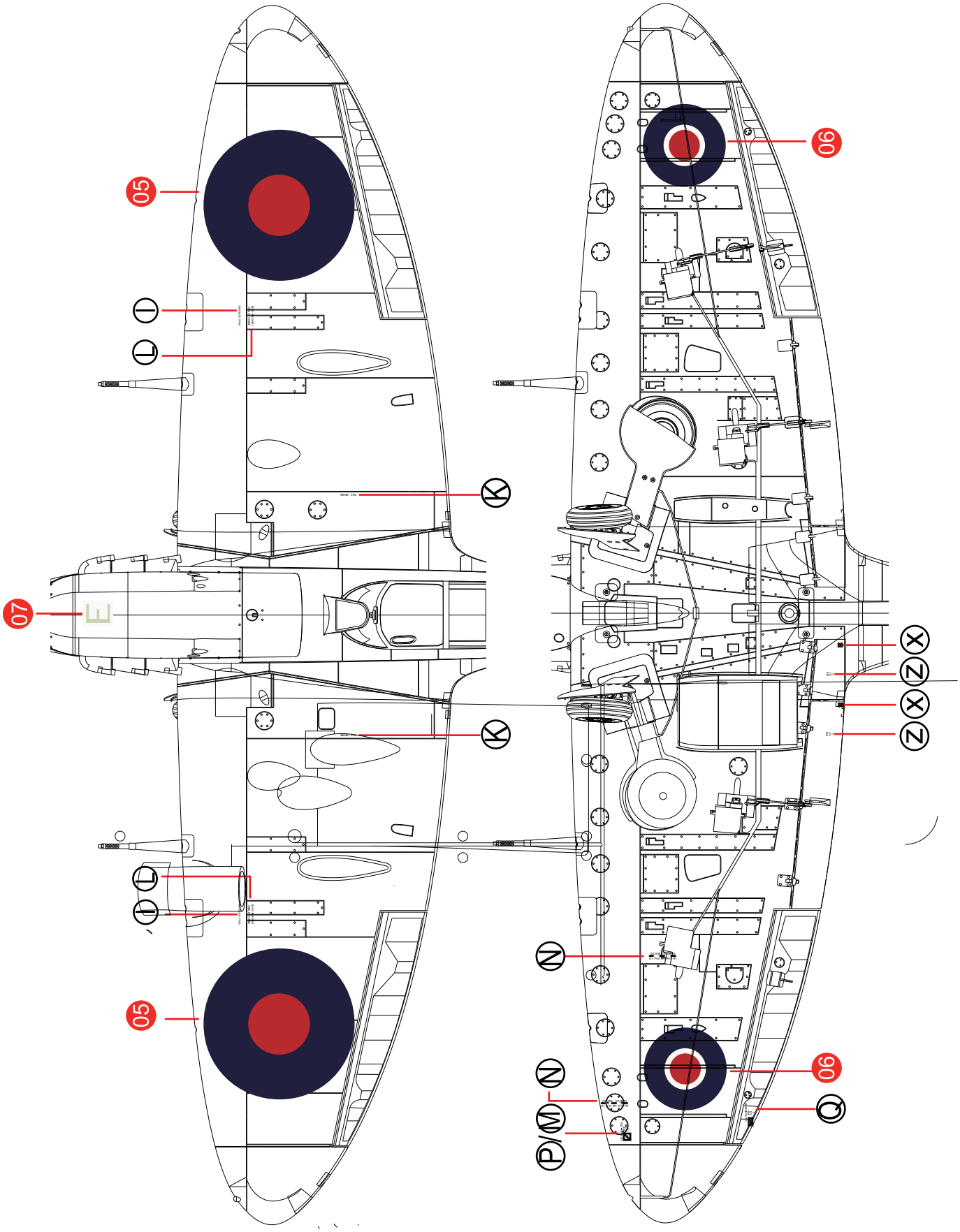
05
I
L
K
07
E
K
L
I
05
06
X
Z
X
Z
N
N
P/M
06
Q

SPITFIRE Mkvb

Spitfire MkVb ER570 'Maj Levine', Major Robert Levine, 4thFS, 52nd FG, USAAF, Tunisia, June. 1943

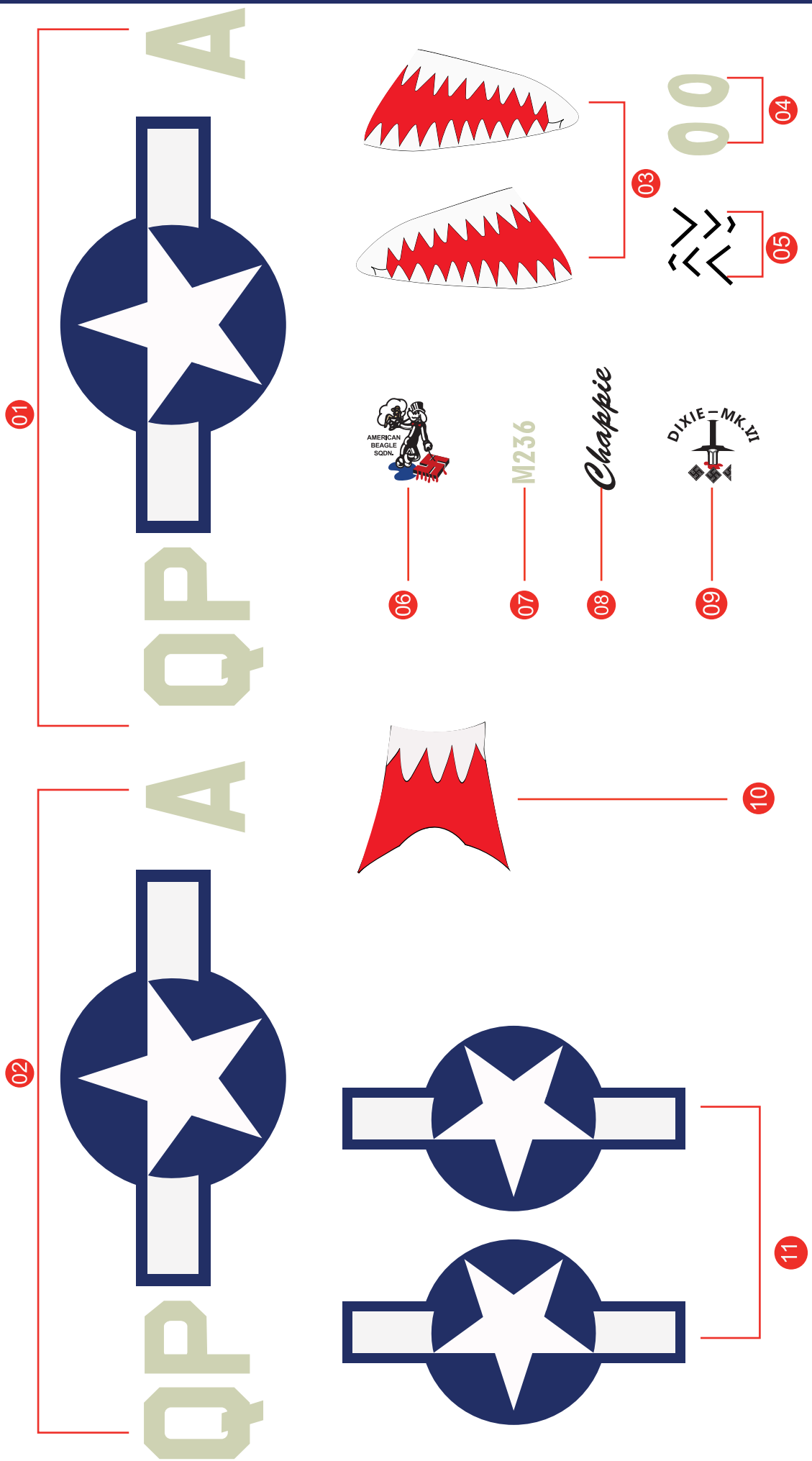

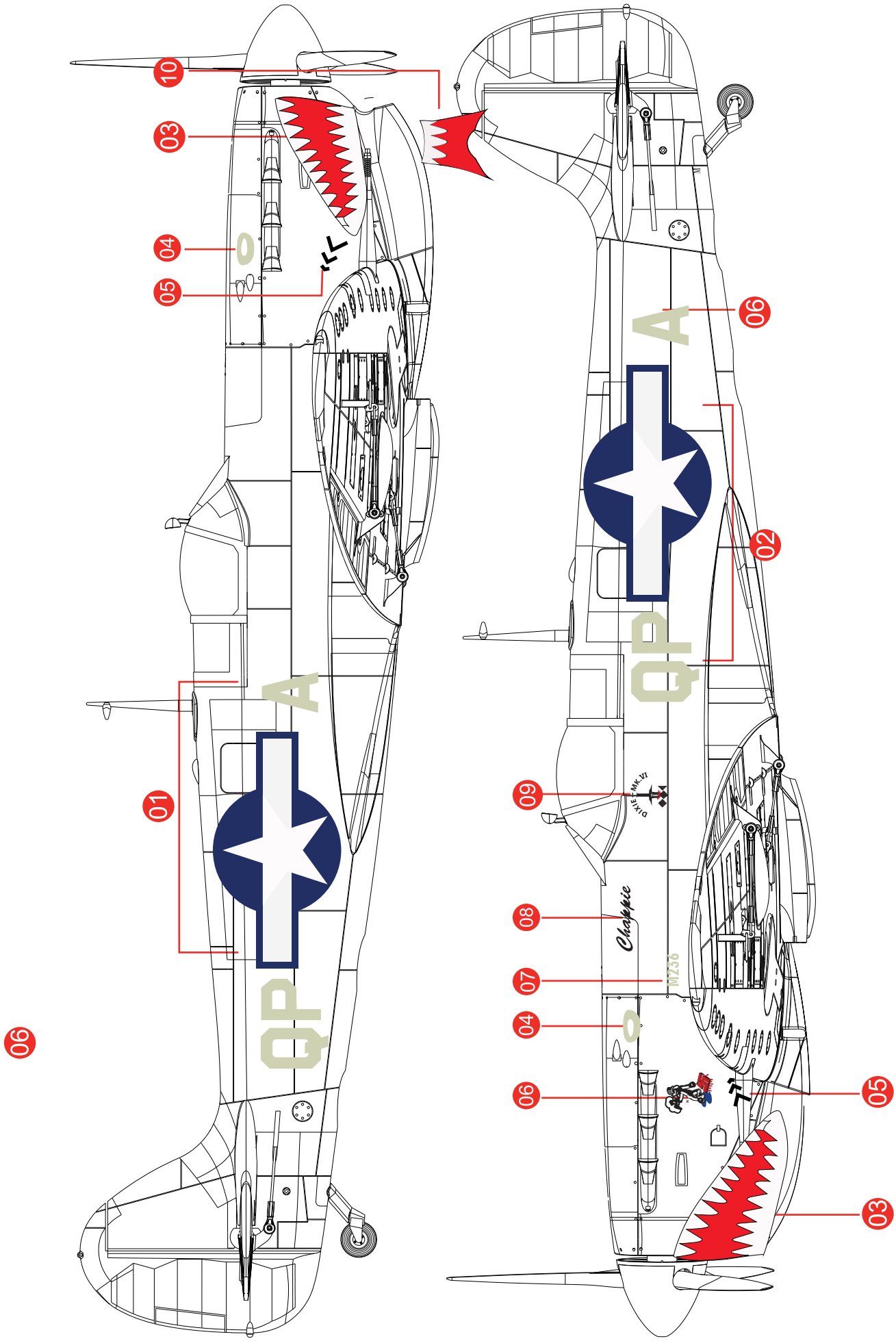
10
03
04
05
01
06
A
QP
06
02
09
08
07
04
06
05
03
A
QP
DIXIE MK.VI
Chappie
M236

SPITFIRE Mkvb

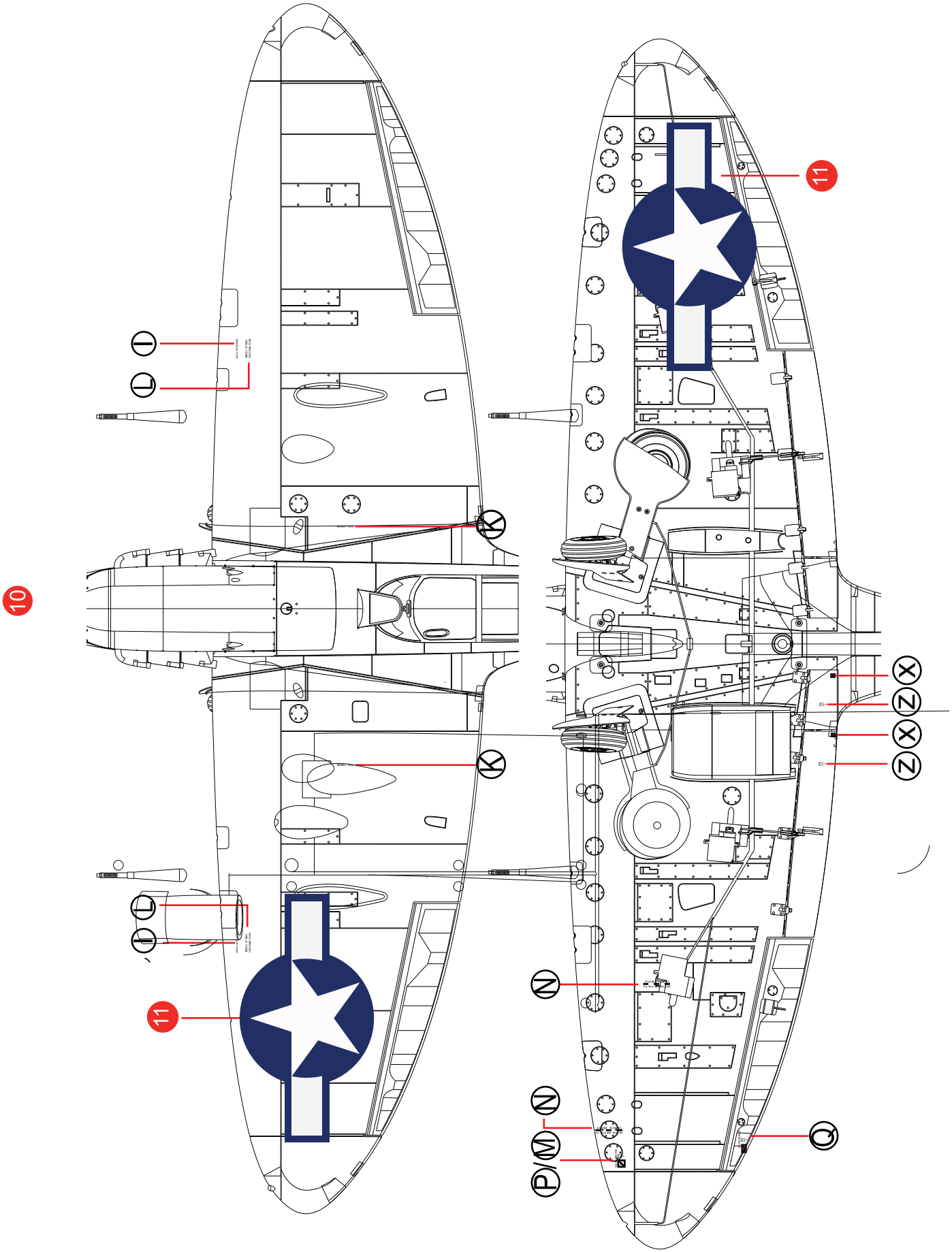

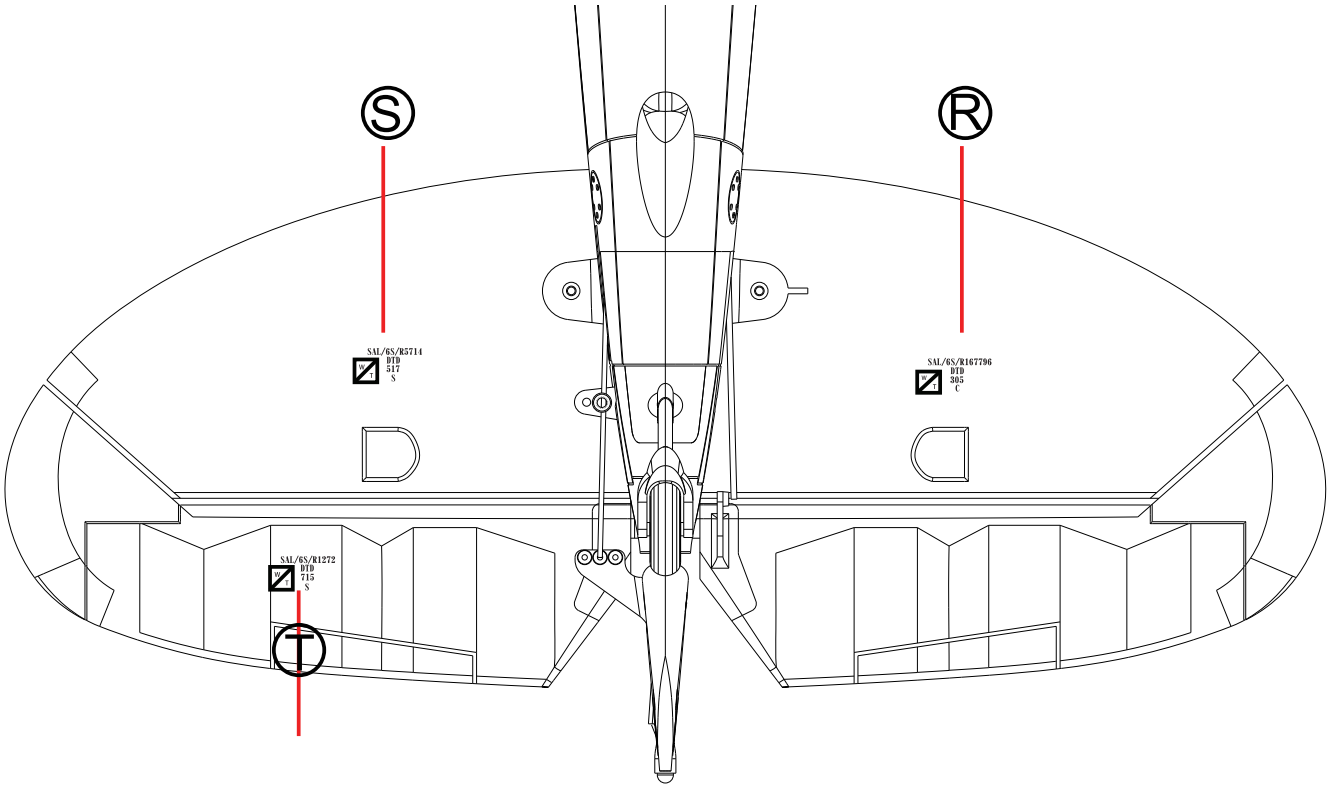

Maintenance markings

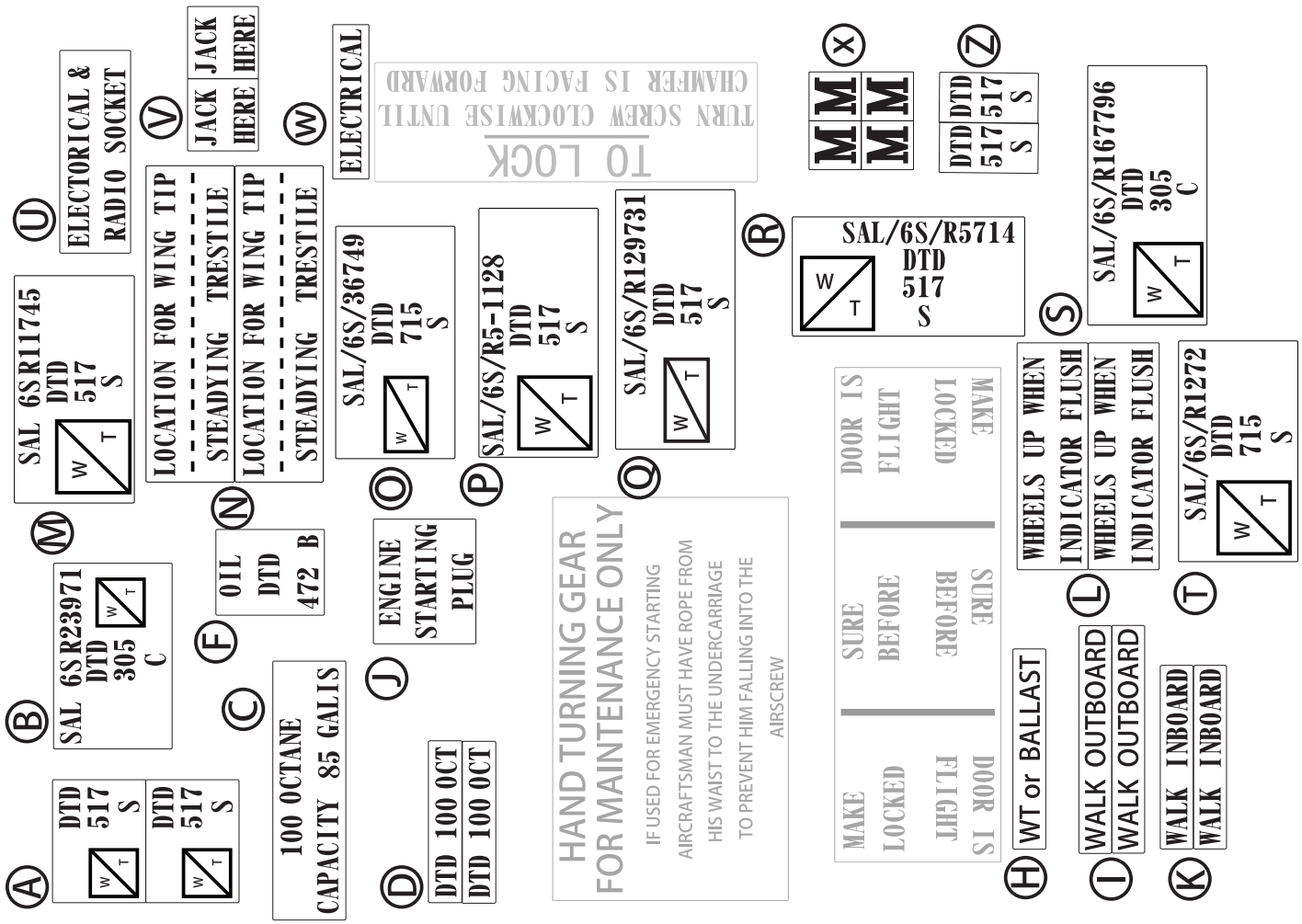

Made in China